Milking Center Wastewater Guidelines

A Companion Document to Wisconsin NRCS Standard 629

Milking Center Wastewater Guidelines

Companion document principal authors:

Brian J. Holmes, University of Wisconsin Madison/Extension, Department of Biological Systems Engineering

Steve Struss, Wisconsin Department of Agriculture, Trade, and Consumer Protection

Publication coordinated and edited by Nina M. Berkani, Environmental Resources Center, University of Wisconsin-Extension. Graphic design/layout by Environmental Resources Center, University of Wisconsin-Extension

Copies of this publication can be viewed and printed from the Wisconsin Natural Resources Conservation Service website: **www.wi.nrcs.usda.gov/news/629guide.html**

This material is based partly upon work supported by the Cooperative State Research, Education, and Extension Service, U.S. Department ofAgriculture, Conservation Technology Transfer Program, under Agreement No. 2008-45045-04386. Any opinions, findings, conclusions, or recommendations expressed in this publication are those of the author(s) and do not necessarily reflect the view of the U.S. Department of Agriculture.

Wisconsin's Standards Oversight Council (SOC)

A technical standard is a document that specifies the minimum criteria for a practice or system of practices. Standards are based on current research, field experience and the best available technology. Technical standards are voluntary unless directly linked to mandatory federal, state or local conservation programs.

For efficiency purposes, many federal, state and local agencies in Wisconsin rely on the same technical standards to implement numerous conservation programs. This diverse user group must deal with different mandates, goals, policies, deadlines and political pressures. The Standards Oversight Council is a multi-agency organization charged with working through these inherent difficulties and overseeing the development, maintenance and distribution of quality technical standards for conservation practices in Wisconsin.

SOC has the responsibility of overseeing the interagency process used in Wisconsin for the development and maintenance of technical standards for urban and rural soil and water conservation practices. Essentially, SOC is the "gatekeeper" for the technical standards process, and it is responsible for the contents of the Technical Standards Process Handbook that serves as a day-to-day reference for everyone involved in soil and water conservation programs. SOC's primary duties center around coordinating the technical standards process to ensure uniformity, quality and accountability.

For more information about SOC, visit: **www.socwisconsin.org**

Participating Members of SOC

USDA - Natural Resources Conservation Service

Wisconsin Department of Agriculture, Trade & Consumer Protection

Wisconsin Department of Natural Resources

Wisconsin Department of Commerce

University of Wisconsin - Extension

Wisconsin Land & Water Conservation Association

Wisconsin Association of Land Conservation Employees

Companion Documents

A companion document, regardless of what form it might take, is intended to supplement the information in a technical standard. A companion document can be as simple as a spreadsheet or checklist, or as complex as planning guidance materials. This publication is a companion document to NRCS Standard 629 for Wisconsin.

Table of Contents

1 *Introduction* *1*

2 *Management & Site Assessment* *3*

Management Assessment 3

Site Assessment 4

Operation and Maintenance *5*

3 *Stream Composition - Why the Environmental Concern?* *6*

Wasterwater Volume 9

4 *Source Control* *11*

Sources & Characteristics of Milking Center Wastewater 11

Challenges in Disposal of Milking Center Wastewater 12

The Source Control Approach to Milking Center Wastewater Management . . 12

Practices & Devices Used in Source Control 13

Water Conservation & Recycling 14

Waste Milk Management 20

Phosphorus Reduction 26

5 *Wastewater Management Alternatives & Design Examples* *27*

Overview of Disposal Systems 27

Milking Center Wastewater Disposal System Options 29

Soil Infiltration Systems 34

Ridge & Furrow 34

Constructed Wetlands 37

Subsurface Absorption 47

Buffer Process 51

Appendix A - *Worksheets* *56*

Appendix B - *Reference Documents* *64*

List of Figures

Figure 1 - *Milking Unit Rack in Conventional Wash* 15

Figure 2 - *Milking Unit Wash Manifold* 16

Figure 3 - *Air Injector Cross Section* 17

List of Figures
(Continued)

Figure 4 - *Reuse of Milk Precooler Water* 18
Figure 5 - *Reuse of Some CIP & Water Softner Wastewater* 19
Figure 6 - *Diverter Valves Used to Capture First Rinse* 21
Figure 7 - *Pails to Capture Drained Milk* 24
Figure 8 - *Sump to Collect Waste Milk* 25
Figure 9 - *Milk Transfer to Bulk Tank with Compressed Air Following Milking* . . . 25
Figure 10 - Combine Wastewater with Manure for Frequent Haul 29
Figure 11 - *Combine Wastewater with Manure for Long-term Storage* 30
Figure 12a - 12b - *Settling/Floatation Tanks* 33
Figure 13a - *Manual Controlled Gravity Flow Dosing System* 35
Figure 13b - *Manual Controlled Pressure Dosing System* 36
Figure 14 - *Constructed Wetland Plan Section* 38
Figure 15a - *Constructed Wetland Cross Section* 39
Figure 15b - *Constructed Wetland Inlet Option* 39
Figure 15c - *Constructed Wetland Outlet Option Cross Section* 39
Figure 16 - *Schematic of Water Budget* 44
Figure 17 - *Subsurface Absorbtion Trench System* 49
Figure 18 - *Organic Matter Substrate Absorption System*. 50
Figure 19a - *Buffer Process Cross Section*. 52
Figure 19b - *Dosing Siphon Cross Section* 53
Figure 19c - *Pre-Treatment Tank and Dosing Pump* 53
Figure 19d - *Automated Distributing Valve* 53
Figure 20 - *Buffer Area Distribution Pipe*. 54
Figure 21 - *Plan View of Distribution Pipe and Buffer Area* 54

List of Tables

Table 1 - *Comparison of Milkhouse & Household Wastewater* 1
Table 2 - *Milking Center Wastewater Characteristics & Effects* 6
Table 3 - *Milking Center Wastewater Characteristics of 9 Canadian Farms* 7
Table 4 - *Elemental Phosphorus Content in Milking Center Cleaning Chemicals* . . 8
Table 5 - *Dairy Waster Characterization - Milking Center* 11
Table 6 - *Source Control Practices & Devices* . . . . . 13 , 14
Table 7 - *Worksheet for Estimating Water Requirements* 23
Table 8 - *Disposal Systems* 27

List of Tables
(Continued)

Table 9 - *Recommended Plants & Seeds* 41, 42, 43
Table 10 - *Average Monthly Precipitation & Pan Evaporation* 45
Table 11 - *Total Wetland Depth* 46
Table 12 - *Gross Precipitation of Wetland Surface* 46
Table 13 - *Max. Soil Application Rate* 47, 48

Appendix A - *Worksheets* *56*

Appendix B - *Reference Documents* *64*

section 1

INTRODUCTION

All dairy farms must dispose of wastewater from their milking centers. Without proper management milking center wastewater can contaminate both surface and groundwater. When milking center wastewater enters surface waters, it can damage aquatic communities. Groundwater contamination can adversely affect drinking water quality and create health hazards. The volume of wastewater produced and the concentration of contaminants vary greatly. Both of these factors must be considered when designing milking facilities. When determining which treatment method to use, dairy producers must determine which is the best treatment method for their situation.

In the past, household type septic systems have been used for milking center wastes. But these systems were unsuccessful because the discharge from most milking centers has three to five times the concentration of contaminants as household waste (Table 1).

Table 1 *Comparison of milkhouse wastewater to household wastewater (Weil, 1991)*

Wastewater Parameter	Milkhouse Wastewater (mg/L)	Household Wastewater (mg/L)
Suspended Solids	996	290
Total Solids	3506	1000
Total Volatile Solids	2389	500
Oil & Grease	330	150
Biochemical Oxygen Demand	1530	400

The large amount of organic matter in milking center wastes requires significant time to degrade in the septic tank, and if not provided sufficient residence time, it keeps the leach lines of a septic system saturated and anaerobic (without oxygen). If milk solids are allowed to pass through the septic tank they usually seal the soil beneath the leach line and force the wastewater to come to the surface. If the leach field does not seal up it is often because the soil is so permeable that the wastewater leaches straight to the groundwater with minimal treatment. In this situation the potential for pollution is high.

Dairy farms that use both manure storage and liquid manure application systems have often included milking center waste in this combined system. This is an efficient way to handle milking center waste. The best way to treat milking center wastes as well as manure is to disperse them on land at an application rate that meets the nutrient requirements of the crops at a time when the crops will use the nutrients. When waste is applied or incorporated in agronomically recommended amounts, the organic matter is broken down aerobically and nutrients become available to the plants. Application of liquid manure (<5% solids) on tiled fields is not recommended because it moves too rapidly through macro pores to the tile line, resulting in untreated waste being discharged to drainage ditches or streams.

Dairy farms that don't have a liquid handling system with long-term storage, or that choose to treat the milking center waste separately, must consider other treatment systems. Factors to consider when determining the most feasible system are cost, management, treatment effectiveness, and suitability to the specific farm site.

The purpose of this companion document to NRCS Standard 629 (USDA Natural Resources Conservation Service, 2008) is to help the designer develop a treatment system for milking center wastewater on farms where manure storage is not available to accept the discharge.

section 2

MANAGEMENT & SITE ASSESSMENT

Management Assessment

Current management of the existing system is a good indicator of how well a new system will be managed. The owner/operator may be using source control practices for wastewater and pollutants. They might incorporate some source control and management practices when they become aware of their benefits. However, they should not be expected to adopt systems that require large amount of management because each operation is different.

A walk through the milking center and inspection of the current wastewater management practices with the owner/operator can reveal systems and equipment being used and the attitude of the operator about managing the system. While inspecting the system, ask about the use and attitude toward reusing waste milk and wastewater, consider opportunities for reducing the amount of waste milk being generated and/or being delivered to the wastewater treatment system. The milking equipment dealer can help determine whether water is properly softened and cleaning/sanitizing chemicals are being used at proper rates. An example of a management assessment is provided in Appendix A, Worksheet 1.

During the walk-through of the milking center, ask about the following:

1. Potential sources of manure in the wastewater handling system.

   Examples could include:

   - Tracking from barn/parlor to milkhouse
   - Boot washing
   - Holding area floor wash down
   - Parlor floor wash down.

The 629 Standard does not allow barn and holding area manure to enter into the treatment system, except for frequent haul. Determine the best way how to divert manure that is currently entering the milking system wastewater handling system from the proposed treatment system and how to minimize the amount in frequent haul systems.

2. The sources and fate of waste and/or excess milk. Examples could include:

   - Colostrum milk not fed
   - Milk from antibiotic treated cows
   - Milk remaining in the milk line/receiver following milking. The standard requires a milk diverter valve at the end of the washwater transfer line for all treatment systems except frequent haul. Inquire if this valve is currently used and where the milking system rinse water is sent.
   - Bulk tank drain down after emptying.

3. Water conservation practices. Examples include:
    - Well water pre-cooler water reused. A well water pre-cooler uses water to cool milk before it reaches the bulk tank or chiller and reduces energy costs
    - Pipeline wash and/or sanitize water reused
    - Manifold for washing milking units used
    - Air injection washing of milking system vs. flood washing
    - Booster pump used to wash walls and floors.

Planning for future changes is the next step after the walk through. The most important changes are those that will increase the volume of wastewater or the degree of contamination.

Volume increases can result from herd size expansion, equipment modifications and/or management changes including:

- Larger diameter pipeline
- Longer pipeline due to more milking positions
- Addition of a water softener
- Addition of a larger bulk tank or more frequent bulk tank cleaning (daily vs. every other day)
- Addition of more milking units
- Less recycling of wastewater
- Addition of a well water milk pre-cooler
- Increasing the size of the milk receiver
- Automating the bulk tank rinse cycle

Wastewater contamination will increase when:

- More milk enters the system drain
- More wash/sanitizer chemicals are used
- More manure enters the system drain

Site Assessment

During the site assessment you must identify existing facilities and natural resources that can contribute to and/or limit the design and installation of a wastewater treatment system. It is essential to have land available in the location in order to protect water and other natural resources. Make sure to take measurements that can be used to design a facility map. You can refer to Standard 629 to find out which features must be included on the map. The Standard also requires an assessment of the proposed site of the wastewater treatment system. This assessment should identify the suitability of the site for protecting natural and cultural resources and compliance with laws and regulations.
Refer to Appendix A, Worksheet 2.

Once the most suitable site(s) is determined, soil test pits should be excavated. Various treatment systems allowed by the standard have specific siting and design criteria. Plan to evaluate the soil and depth to limiting layers based on the criteria for the treatment system(s) being considered.

The capacity of the existing manure storage and any separate milking center wastewater storage should be included in this assessment. If there is storage capacity available in the manure storage for the addition of milking center wastewater, this option should be considered. A milking center wastewater storage tank may be incorporated into the design if it meets the criteria of the standard.

There are specific design criteria for pretreatment tanks in Standard 629 including baffling. Existing tanks may need to be modified to satisfy these criteria.

SAFTEY WARNING: NEVER ENTER A CONFINED SPACE (TANK) WITHOUT ADEQUATE VENTILATION OR A SELF CONTAINED BREATHING APPARATUS, A HARNESS AND ENOUGH ASSISTANCE TO PULL YOU FREE FROM THE SPACE.

Operation and Maintenance

Operation and maintenance of the milking center wastewater system must conform with the management plan. The management plan should specify what equipment and/or systems are present and how and when each component should be serviced. One way to assure compliance with an operation and maintenance plan is to document the activities performed on the system components. The designer should provide a sample documentation sheet for each system component. Examples of documentation of operation and maintenance worksheets are provided in Appendix A, Table 3.

An emergency management plan should be developed and located for quick reference. The emergency plan should include a contingency plan for unexpected quantities of wastewater, waste milk, chemicals and runoff, and instructions detailing the proper disposal of contaminated milk in the bulk tank. The plan should contain contact information for those who can deal with the situation including the owner/operator, local department of natural resources, licensed pumper/hauler, excavator, land conservation department, etc.

When large amounts of waste milk, manure or cleaning chemicals enter the milking center drain, the pretreatment tank should be pumped before wastewater is reintroduced into the tank. This will help to reduce the amount of contaminants reaching the treatment system. Dispose of the tank contents in a manure storage or land apply according to the spreading plan, avoiding tile lines. The system designer should work with the producer to develop a written spreading plan that satisfies the intent of the NRCS 590 Standard, Nutrient Management.

section 3

WASTE STREAM COMPOSITION

why the enviromental concern?

Milking center wastewater contains numerous contaminants that can affect water quality, including solids, phosphorus (P), ammonia-nitrogen and chlorides (Table 2). If milking center wastewater contains these contaminants and enters surface waters, it can damage aquatic communities. Chronic releases of untreated milking center wastewater have been identified as one cause of declining quality and diversity in aquatic communities. Groundwater contamination could adversely affect drinking water quality and create health hazards.

Table 2 *Milking center wastewater characteristics and effects of improper wastewater discharge on a southern Wisconsin stream (Weber, 1991)*

Characteristics	Raw Waste	Stream upstream from discharge	Stream 10 ft downstream from discharge
Biochemical Oxygen Demand (BOD)	1200	<3	380
Chloride (mg/L)	1100	19	420
Ammonia-nitrogen (mg/L)	1.05	0.05	0.70
Nitrate plus nitrite nitrogen (mg/L)	0.05	6.33	1.87
pH	6.5	8.1	7.1
Suspended solids (mg/L)	330	N/A	N/A

The composition, quantity, and pollution strength of milking center wastewater can vary dramatically among farms (Table 3), and even on the same farm over time. Graves (1972) identified several factors that influence wastewater characteristics, including:

- Number of cows milked
- Type of milking facility (parlor or pipeline)
- Length of time cows are confined in holding areas or parlors
- Udder prepping method
- Feed access in parlors
- Waste milk management
- Floor/gutter cleanup method
- Operator management throughout the milking cycle

Table 3 *Milkhouse wastewater characteristics from nine southwestern Ontario, Canada dairy farms (Hayman, 1988)*

Herd size (cows)	Washwater Volume (gallons/day)	Total Phosphorous (lb/year)	Soluble Phosphorous (lb/year)	Suspended Solids (lb/year)
35	98	42	7	110
28	89	72	26	22
48	144	100	44	122
53	164	43	19	131
50	78	107	52	26
60	141	90	30	211
35	67	11	1.3	15
35	146	74	58	208
50	433	104	71	676
43	151	79	39	168

Wastewater Contaminants

Each contaminant affects water quality and the effectiveness of the treatment system. The main contaminants are discussed below.

Solids

Solids in milking center wastewater come from waste milk, cleaning agents, waste feed, manure, and hoof dirt. Total solids content of milking center wastewater ranges from 1,600 milligrams per liter (mg/L) to 7,000 mg/L (Lindley, 1979; Weil, 1991; Finlayson, C., 1995). Estimates of annual total solids contributions from milking center wastewater on a per-farm basis vary from less than 660 lb. (Hayman, 1988) to as much as 30,000 lb. (Zall, 1972).

Organic solids are a source of particular concern. In aerobic environments bacteria break down organic solids in a process requiring oxygen. The amount of oxygen required is called the biochemical oxygen demand (BOD5), usually expressed as milligrams (mg) of oxygen consumed per liter (L) of solution. The BOD5 of milking center wastewater is highly variable, ranging from 3.00 mg/L to nearly 10,000 mg/L (Zall, 1972; Lindley, 1979; Sherman, 1981; Finlayson, C., 1995).

The greatest contributor to the BOD5 of milking center wastewater is waste milk. Raw milk has a BOD5 of about 100,000 mg/L (Loehr, 1974), and bacteria consume 1.2 lb. of dissolved oxygen (DO) for every pound of milk solids (Atherton, 1971).

Contamination of milking center wastewater with milk creates an anaerobic (without oxygen) environment unless steps are taken to prevent this result. An anaerobic environment is less efficient than an aerobic (with oxygen) one; breakdown of the organic matter is slower and odors are produced.

Manure and other organic materials such as bedding and feed have lower BOD5 per pound of solid than milk because they contain large amounts of lignin and cellulose. Manure deposited in holding areas and parlors contributes the majority of total BOD5 load in milking center wastewater if it is washed down milking center drains.

Manure is not usually a major contaminant in the wastewater from milking centers without a milking parlor. Manure solids fill settling tanks with incompletely digested fibers. If these solids are allowed into a soil treatment system, they can rapidly plug it.

Phosphorus

Cleaning chemicals, milk, feed and manure contribute phosphorus to milking center wastewater. Lindley (1979) reported a total P concentration in milking center wastewater of 60 mg/L to 290 mg/L (avg. 175 mg/L). The total P in pipeline rinse water was 60 mg/L to 1,100 mg/L (Hayman, 1988). Daily cleaning practices accounted for the wide variation. Reporting on nine Ontario, Canada dairy farms, Hayman found annual P loads from pipeline washing alone were 11 lbs. to 105 lbs. per farm (Table 3). Miller et al. (1987) estimated that milkroom wastes accounted for nearly 12% of annual P discharges from agricultural activities within the Lake Erie Basin. Hayman (1988), shows the average of ten milk houses produced 1.65 lbs. of P per cow per year for herds in the 28-60 cow size.

Cleaning chemicals, especially detergents and acid rinses, account for the majority of P in milking center wastewater (Sherman, 1981). These products contain 3.1% to 10.6% P by weight (avg. 8.5%; Sherman, 1981), although low and P-free products are available (Table 4).

Phosphorus in milking center wastewater is delivered largely in soluble, reactive form, and effectively promotes eutrophication.

Table 4 *Elemental phosphorous content in commonly used milking system cleaning chemicals (E. Joseph, pers. com.)*

Milking system cleaning chemical	Phosphorous Content (% elemental P by weight)
Liquid detergent, sodium hydroxide base	0
Liquid detergent, potassium hydroxide base	2-5
Powdered detergent	5-15
Acid rinse, phosphoric acid base	10-20
Acid rinse, phosphoric acid plus other acids	5-15
Liquid sanitizer, sodium hypochlorite base	0
Powdered general purpose cleaner	5-15
Liquid general purpose cleaner	0
Iodine udder wash	3-5
Non-iodine udder wash	0-1

Ammonia-nitrogen and chlorides

Ammonia originates from manure, urine and decomposed milk proteins. Chlorides derive from urine, milking system cleaner and sanitizing chemicals, and water softener regeneration. In a study of five farms near Green Bay, Wisconsin, milking center wastewater chloride concentration was 100 mg/L to 845 mg/L, and ammonia-nitrogen was 0.14 mg/L to 4.40 mg/L (Finlayson, C., 1992).

Very small concentrations of ammonia-nitrogen (0.02 mg/L to 0.05 mg/L) are toxic to fish and other vertebrates. Chlorides affect the salinity of water and hence, aquatic organisms' ability to adapt to their environment. Chloride concentrations above 230mg/L can alter aquatic communities, while concentrations above 860 mg/L are frequently lethal to aquatic organisms.

Other environmental and health concerns

Standing wastewater is a feature of some wastewater treatment system designs. But, it can also indicate treatment system failure. Under anaerobic conditions, noxious odors develop. Standing wastewater also attracts rodents and insects, leading to health concerns. Milk in the wastewater multiplies these problems.

By law, milking animals must not come into contact with milking center wastewater. It is easy to prevent cows from entering wastewater treatment and disposal areas, but they frequently have access to surface waters contaminated by upstream dairy operations. Priority should be given to improving milking center wastewater center wastewater management at the source, but fencing can prevent water contact where needed. Fencing around surface wastewater treatment areas to exclude livestock is recommended. The buffer area and ridges of a ridge and furrow system may be grazed when the soil is dry enough to prevent compaction and rutting by hoof traffic. Contact the local milk inspector to determine when/if lactating animals can be grazed in these areas.

Wastewater Volume

Activities that produce milking center wastewater include:

- Prepping and disinfecting dairy cows prior to milking
- Cleaning and sanitizing milking equipment and bulk tanks
- Washing down milkhouses, milking parlors and holding areas
- Discarding contaminated milk
- Pre-cooling milk
- Softening water

The required cleaning process for pipeline systems includes four cycles: warm water rinse, warm water acid rinse, hot water basic detergent wash, and disinfection. Using air injection creates pulses of wash cycle water, and thereby requires less water to wash the system compared to a flooded line wash system. Some producers eliminate a cycle one or more times per day. This is not recommended but does reduce the amount of wash water discharged. When properly set up and

managed, automated wash cycle controllers can control the wash cycles and quantities of wash chemicals more consistently than manually operated systems.

Water softeners use 70 to 120 gallons of water during each regeneration cycle. Regeneration may be required several times per week.

The daily quantity of wastewater discharged from a milking center is a function of the systems used, equipment design, and management applied. Various sources have reported that wastewater volume varies as a direct function of the number of cows milked. However, that is only is a small part of the total. A properly designed milk pre-cooler will use about two gallons of well water to cool each gallon of milk. The amount of milk produced is a function of the number of cows milked as well as the production per cow. Thus the amount of water used is somewhat related to cows milked, but more importantly, the decision about what to do with the discharge water determines how much of it contributes to the wastewater stream. This discharge is warmed but not contaminated. A good design would find another use for this discharge, such as cow drinking water, milkhouse wash down, etc. When this is done, it greatly reduces the amount of wastewater generated. Thus a design change can reduce the quantity of wastewater flow. Well water pre-cooler discharge is viewed as non-potable and cannot be reused for human consumption.

The best way to know the quantity of wastewater discharge is to install flow meter(s) on the water supply line(s) to the milking center. After several weeks, the quantity of water use will be determined and the daily production can be calculated. The wastewater discharge will be very close to that used in the milking center provided that uses for cattle watering are deducted. Where water use cannot be measured with flow meters, the Milking Center Waste Volume spreadsheet or equivalent can be used. The Milking Center Waste Volume Excel spreadsheet is posted on the WI NRCS website with the other engineering spreadsheets at: **www.wi.nrcs.usda.gov/technical/eng_spreads.html.**

section 4

SOURCE CONTROL

Sources and Characteristics of Milking Center Wastewater

Washing milking and milk cooling equipment contribute waste milk, cleaning compounds and sanitizers to the wastewater discharge. Frequently, excess colostrum and antibiotic treated milk is poured into the floor drain contributing to the wastewater discharge. Milkroom wash down can contain dirt, floor lime, feed particles, and manure. Water softener discharge can contribute chloride, calcium and magnesium to the discharge. The above is common to both milking parlors and stanchion barn pipeline milking systems. In addition to the above, wash down of milking parlors and holding areas can contain waste milk, manure, feed and soil. Management can greatly affect the quantity and level of contamination in the milking center wastewater discharge.

Table 5 provides some values for the various discharge quantities and contamination levels. By including flows from the various components of a system, one can see how the quantity and contamination level varies. One must realize how significant the management factor contributes to the degree of contamination. Source control practices can reduce the volume and quantity of contaminants discharged from the milking center.

Table 5 *Dairy waste characterization – milking center* [d]

Component	Units	Milk House Only	Milk House & Parlor	Milk House, Parlor, & Holding Area[a]	Milk House, Parlor, & Holding Area[b]
Volume	ft^3/day/1000lb	0.22	0.60	1.40	1.60
Water Volume	gal/d/ay/1,400 lb cow	2.3[c]	6.3[c]	14.7[c]	16.8[c]
Moisture	%	99.72	99.40	99.70	98.50
Total Solids	% wet basis (w.b.)	0.28	0.60	0.30	1.50
Volatile Solids	lb/1,000 gal	12.90	35.00	18.30	99.96
COD (chemical oxygen demand)	lb/1,000 gal	25.30	41.70	-	-
BOD_5	lb/1,000 gal	-	8.37	-	-
N	lb/1,000 gal	0.72	1.67	1.00	7.50
P	lb/1,000 gal	0.58	0.83	0.23	0.83
K	lb/1,000 gal	1.50	2.50	0.57	3.33

[a]**Holiding area scraped and flushed – manure excluded.**
[b]**Holding area scraped and flushed – manure included.**
[c]**These values may vary by up to 500%.**

[d]Wright and Graves, 1992

Challenges in Disposal of Milking Center Wastewater

Properly designed and managed wastewater disposal systems treat wastewater to remove or lessen contaminants. Wastewater can then be disposed of with minimal environmental risk. Unfortunately, disposal systems are often costly, and few perform consistently. High contaminant loads in milking center wastewater have caused many systems to fail after short periods, resulting in inconvenience, lowered profits and increased environmental impacts.

The quality and quantity of wastewater leaving milking facilities determines disposal needs. Reducing the amount of wastewater and contaminants generated means less treatment expense and fewer environmental risks.

The Source Control Approach to Milking Center Wastewater Management

The goal of source control is to decrease the amount of wastewater and pollutants leaving the milking center while maintaining milk quality. Source control consists of practices and devices that help dairy farmers operate in a more profitable and environmentally sound manner. Specific practices and devices fall into three general categories: water conservation, waste milk management, and phosphorus reduction (Table 6).

The greatest benefits of source control occur on farms that handle milking center wastewater and manure separately. Wastewater disposal systems may last longer if wastewater volume and pollutant loads are decreased, making costly repairs or expansions unnecessary. For new installations, lower cost treatment and disposal systems are feasible if the milking center wastewater demands less treatment. On farms where milking center wastewater is mixed with manure and land spread, source control conserves manure storage space and decreases the amount of material hauled and applied to fields. Whether manure is handled as a solid or a liquid, source control saves the producer money by reducing the use of hot water and chemical cleaners. Source control offers increased protection against surface and groundwater contamination.

Source control can be incorporated into new or existing milking systems. Many source control methods and devices are simple and readily implemented with little or no modification of existing systems. Others are more complex or involve extensive modifications; they are best deferred until new systems are constructed.

Increased profitability provides incentive for producers to implement source control. Reduced expenditures for energy, chemical cleaners and wastewater disposal can bring rapid payback on many devices. However, significant initial investments are often required and many practices demand extra labor on a daily basis. The greatest benefits are achieved when source control practices are incorporated into daily management routines.

Practices and Devices Used in Source Control

The practices and devices of source control can improve wastewater characteristics inside the milking center (Table 6). Each is designed to conserve water, manage waste milk, and/or reduce phosphorous.

Effective source control planning requires a working knowledge of all available options. It is essential to know whether the method is compatible with existing milking equipment and management practices, its relative costs vs. benefits (savings potential), and the feasibility of retrofitting or incorporating it into new construction. Designers unfamiliar with milking equipment may need to seek additional information and assistance.

Producers are encouraged to seek approval from state or local milk inspectors before implementing changes involving sanitation. Furthermore, indices of milk quality should be monitored after changes are made.

Table 6 *Source control practices and devices*

Water Conservation/Recycling Application[a]	Retrofit[a]	New[a]	Savings potential[b]	Managment Ease[c]	Cost[d]
1. Use water-efficient cow-prepping method	■	■	H	E	L
2. Install a clean-in-place sanitation system	■	■	M	E	H
3. Adjust milking system wash water volume	■	■	H	E	L
4. Install a milking unit wash manifold	■	■	M	E	M
5. Install and tune air injector(s)	■	■	H	E	M/H
6. Manually rinse bulk tank	■	■	L	E	L
7. Combine acid rinse and sanitizer cycles	■	■	L	E	L
8. Inspect hoses for leaks; use spring-release nozzles	■	■	L	E	L
9. Scrape manure from milking parlor floor to manure handling[e]	■	■	H	M	L
10. Install a booster pump for floor cleaning	■	■	M	M	M
11. Design milkhouse and parlor floors for efficient cleaning		■	M	E	M/H
12. Reuse milk pre-cooler system water	■	■	H	E	M/H
13. Reuse CIP wastewater	■	■	M	E	M/H
14. Reuse water softener wastewater	■	■	M	E	M/H

(continued on pg. 14)

Table 6 (continued) *Source control practices and devices*

Waste milk management	Retrofit[a]	New[a]	Savings potential[b]	Managment Ease[c]	Cost[d]
15. Dispose of colostrum and transitonal milk	■	■	H	E	L
16. Mastitic milk and milk from cows treated with antibiotics	■	■	H	E	L
17. Milk spills, bulk tank failures, and rejected bulk tank loads	■	■	H	E	L
18. Remove pipeline and bulk tank residual milk	■	■	H	E	L/M
19. Prerinse milk pipelines and bulk tanks (Automate with a diverter valve)	■	■	H	E	L/M
20. Simplify milk pipeline geometry	■	■	H	E	M/H
21. Collect waste milk below milk transfer pump	■	■	H	E/M	L/H
22. Remove milk from transfer line w/compressed air		■	H	M	H/M

Phosphorous Reduction	Retrofit[a]	New[a]	Savings potential[b]	Managment Ease[c]	Cost[d]
23. Install a water softener or increase softening time	■	■	M	E	L/M
24. Use low-phosphorous detergents and acid rinses	■	■	H	E	L

NOTE: Other practices and devices that reduce phosphorous include those that reduce cleaning chemical requirements (2-6, 13), and those that reduce the manure (9) or milk (15-18) content of wastewater

[a] Suitability of practice for existing (retrofit) and/or new dairies or milking systems.
[b] Relative savings (water), reduction (phosphorous) or removal (waste milk) by practice or devise. H = high, M = moderate, L = low.
[c] Relative effort required to conduct, practice, and/or maintain device after installation. E = easy, M = moderate.
[d] Relative cost of practical device, H = high, M = moderate, L = low.
[e] Standard 629 does not allow manure to be washed into the treatment system except for frequent haul system.

Water Conservation and Recycling

1. Use water-efficient cow-prepping techniques

The recommended way to clean and stimulate udders prior to milking is by using moistened single-service towels. This is the best way to control mastitis and use water efficiently. Prepping cows with moist towels requires about 0.5 gallon water/cow-day, compared to one to four gallons/cow-day used with automatic prep stalls or hand spraying. Switching to the moist towel technique may increase cow prep time slightly.

2. Install a clean-in-place sanitation system

Clean-in-place (CIP) systems automate the chore of milking system cleaning. Modern systems are programmable and electronically controlled, allowing consistent control over water temperatures, chemical cleaner concentrations and cleaning cycle timing. This consistency can lead to substantial water and chemical cleaner savings as well as improved sanitation. The systems are expensive, and must be properly adjusted and periodically calibrated to assure optimal results.

3. Adjust milking system washwater volume

During pipeline cleaning, water in the wash sink should be kept at the minimum level required to keep teat cup ends submerged. If the minimum washwater depth is more than a few inches, water is being wasted. Reducing washwater volume will conserve water, energy and cleaning chemicals.

Traditional round-bottomed sinks were designed for washing bucket milking machines. When milking units are placed in these sinks for cleaning, teat cups tend to spread out and float to the surface of the wash solution. Therefore, the sink must often be quite full before teat cup ends are immersed, and large volumes of non-circulating washing solutions are wasted. A stainless steel rack could be devised to hold milking units upright and keep teat cup ends close to the sink bottom. See Figure 1, *Milking Unit Rack in Conventional Sink* and point 4 below, Wash Manifold.

Reduced washwater temperature is a concern with any method that decreases water use during milking system cleaning. For many cleaning chemicals, manufactures recommend solutions return to the wash sink at 110° F or above to prevent the redepositing of milk residues in pipelines. If return temperature is too low, water can be heated to a higher initial temperature, or a booster heater can be installed in the sink to reheat water as it is recycled. Insulating and/or covering the sink can also help.

FIGURE 1 **Milking Unit Rack in Conventional Wash Sink**

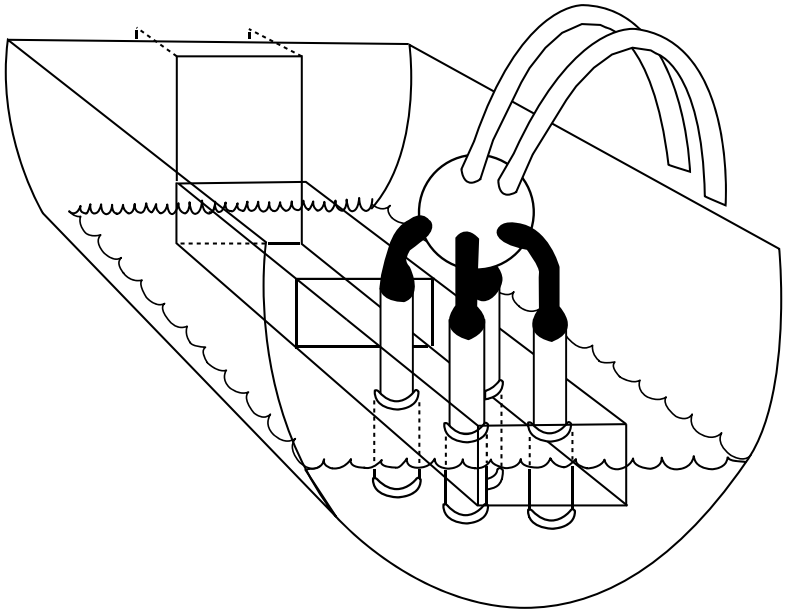

4. Install a milking unit wash manifold (pipeline systems) or unit washers (parlor systems)

The milking unit wash manifold (Figure 2) provides an alternative to using a wash sink for immersing teat cups. This device has sites for attaching the milking unit, and is usually installed above the wash sink. Wash solutions pass through a hose from the sink into the manifold. The solutions are then delivered to the attached milking units and from there flow into the milk pipeline.

Advantages of wash manifolds include reduced use of water and chemical cleaners. The devices can be retrofitted on many milking systems. One disadvantage is that measures may be required to maintain washwater temperature may be required.

5. Install and tune air injector(s)

Air injectors intermittently admit air into milking systems during pipeline cleaning cycles. The bursts of air form slugs of cleaning solution ahead of them and create turbulence, increasing the cleaning efficiency (Figure 3). Properly adjusted air injectors reduce the amount of water and chemicals required to clean pipelines by 10% to 30%. Savings in water heating energy are also possible. Air injectors are standard equipment on new milking systems with pipeline diameters greater than two inches and can be retrofitted onto most existing systems.

Milking Unit Wash Manifold **FIGURE 2**

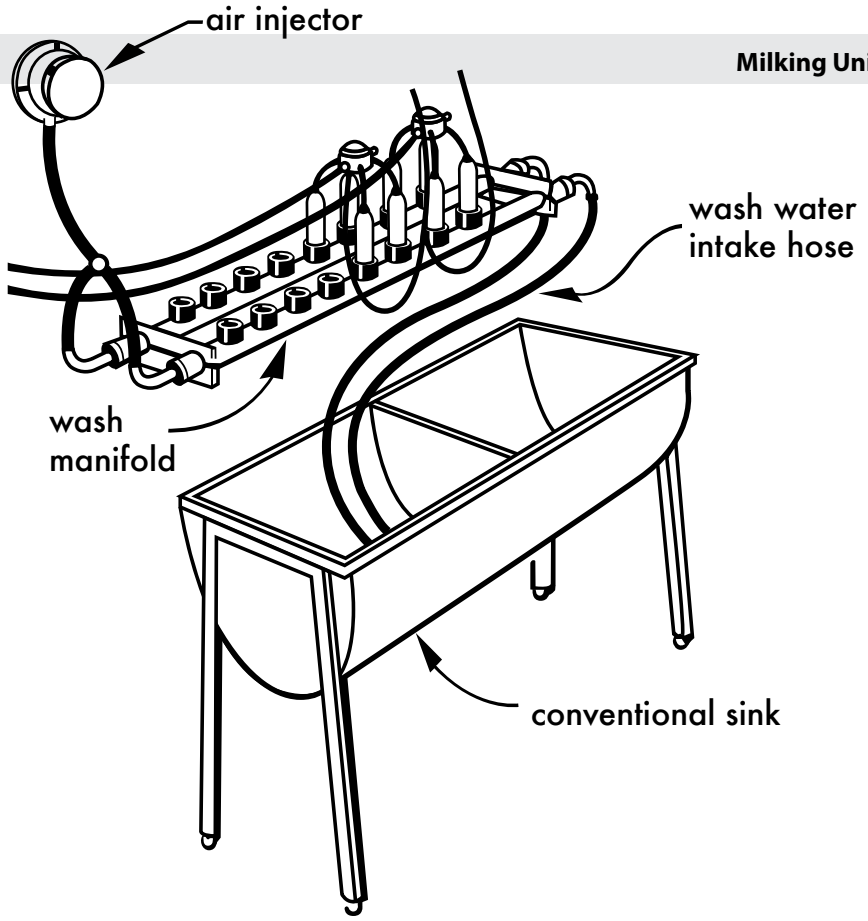

FIGURE 3 **Air Injector Cross Section**

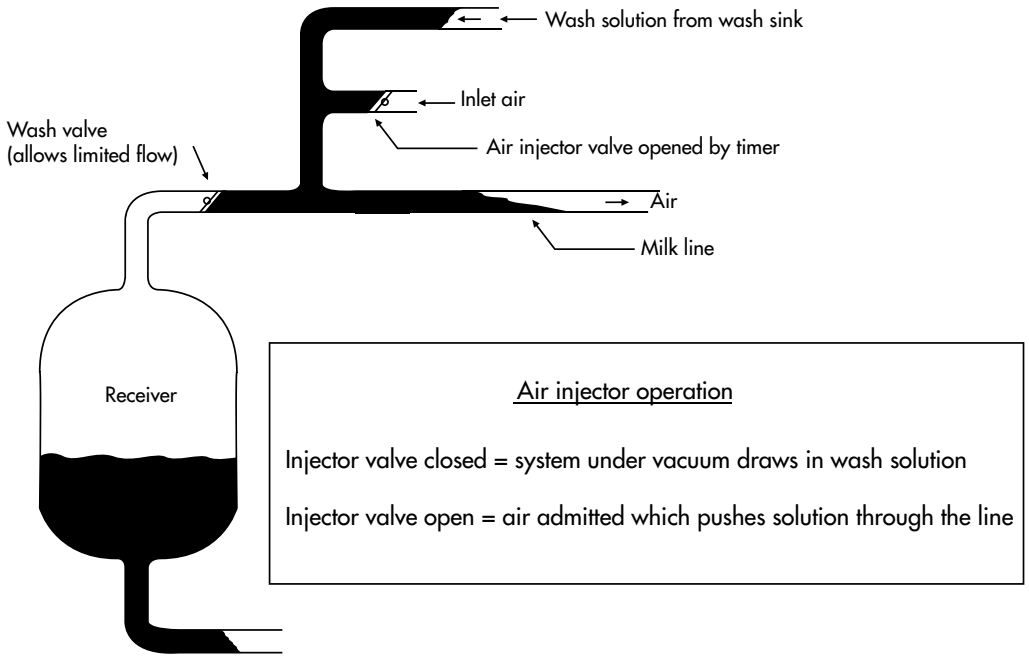

6. Manually rinse bulk tank

If bulk tanks are cleaned with a CIP system, replacing the automatic rinse cycle with a manual rinse reduces water used to rinse the tank by as much as 50%. Manual rinsing is best accomplished with a high-pressure spray. This practice requires some added labor.

7. Combine acid rinse and sanitizer cycles

Chemical cleaning agents that simultaneously acid-rinse and sanitize are available. The single-chemical product is more expensive, but it can reduce water use, water-heating energy and overall chemical usage. This practice is best suited to situations where there is a relatively short time lag between cleaning and the next milking, such as in operations milking near maximum capacity of cows milked per milking or where cows are milked three times per day. Otherwise, a sanitizing cycle should be run immediately before milking.

8. Inspect hoses and use spring-release nozzles

Hoses used in the milking center should be inspected frequently for leaks and repaired promptly if necessary. Installing spring-release nozzles on hoses used intermittently during clean-up conserves water and makes cleaning more efficient by increasing water delivery velocity compared to un-nozzled hoses.

9. Scrape milking parlor floor when using frequent haul

The frequent haul system is the only method of handling milking center wastewater within the 629 Standard that permits manure to be delivered to the system. Scraping manure from the parlor and holding area before washing down the floors helps to reduce the amount of water required to wash the floor, and minimizes manure solids entry.

10. Install a booster pump for floor cleaning (parlor systems)

Booster pumps increase water delivery velocity, thereby increasing the efficiency of hosing to remove manure and hoof dirt from parlor and holding area floors. Using a booster pump preceded by floor scraping results in significant water savings.

11. Design milkhouse, parlor and holding area floors for efficient cleaning

Poor floor drainage systems can result in excessive water use and may require more work during cleaning. For new construction, consultants and engineers skilled in drainage system design should be involved in laying out drains and floor elevation controls such as slopes and berms (Light, 1972).

12. Reuse milk pre-cooler water

Pre-coolers provide significant savings in milk-cooling energy, but they generate large quantities of wastewater. Pre-cooler wastewater is warmed but is not contaminated. It can be reused in a number of ways including watering livestock, washing floors, gutters and boots, or udder cleaning (Figure 4). Pre-cooler water can be discharged directly to stock tanks or reservoirs. Reuse for cleaning requires installation of holding tanks, pumps and distribution lines. Pre-cooler water is not potable, and therefore cannot be used for human consumption or cleaning milking equipment.

FIGURE 4 **Reuse of Milk Precooler Water**

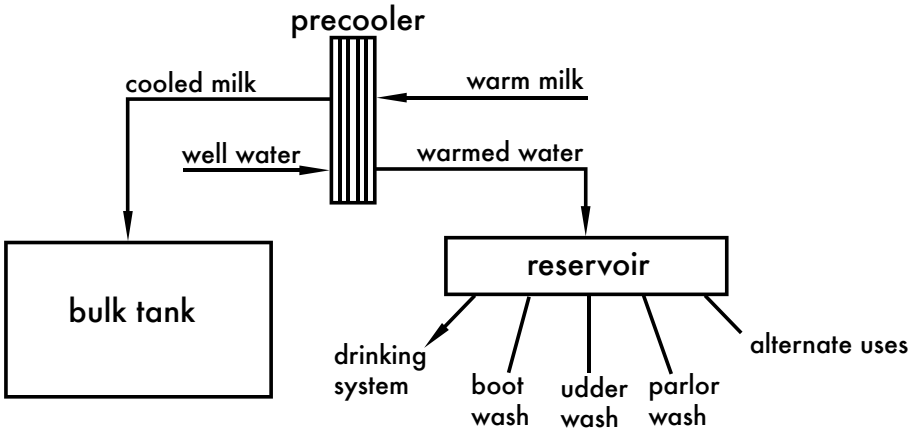

13. Reuse CIP wastewater

During milking system cleaning, wastewater from CIP cycles is usually discharged to milkhouse sink drains. By installing appropriate plumbing and holding tanks, used detergent and acid rinse solutions can be captured separately and reused once for a subsequent CIP cycle. The CIP system can often be programmed to accomplish this automatically. Recycled solutions may need to be fortified with small amounts of additional chemicals and will have to be reheated prior to reuse.

Detergent wash, acid rinse and sanitizer solutions (graywater) can be collected and reused for cleaning floors and walls. Some new plumbing, a holding tank and pump are required (Figure 5). In flushing operations, solutions can be diverted directly to flushing tanks. Many CIP systems can be programmed to automatically divert used solutions.

CAUTION: Some acid rinses and sanitizers are incompatible and can generate dangerous chlorine gas if mixed. Read labels to determine compatibility before mixing chemicals.

FIGURE 5 **Reuse of Some CIP & Water Softner Wastewater**

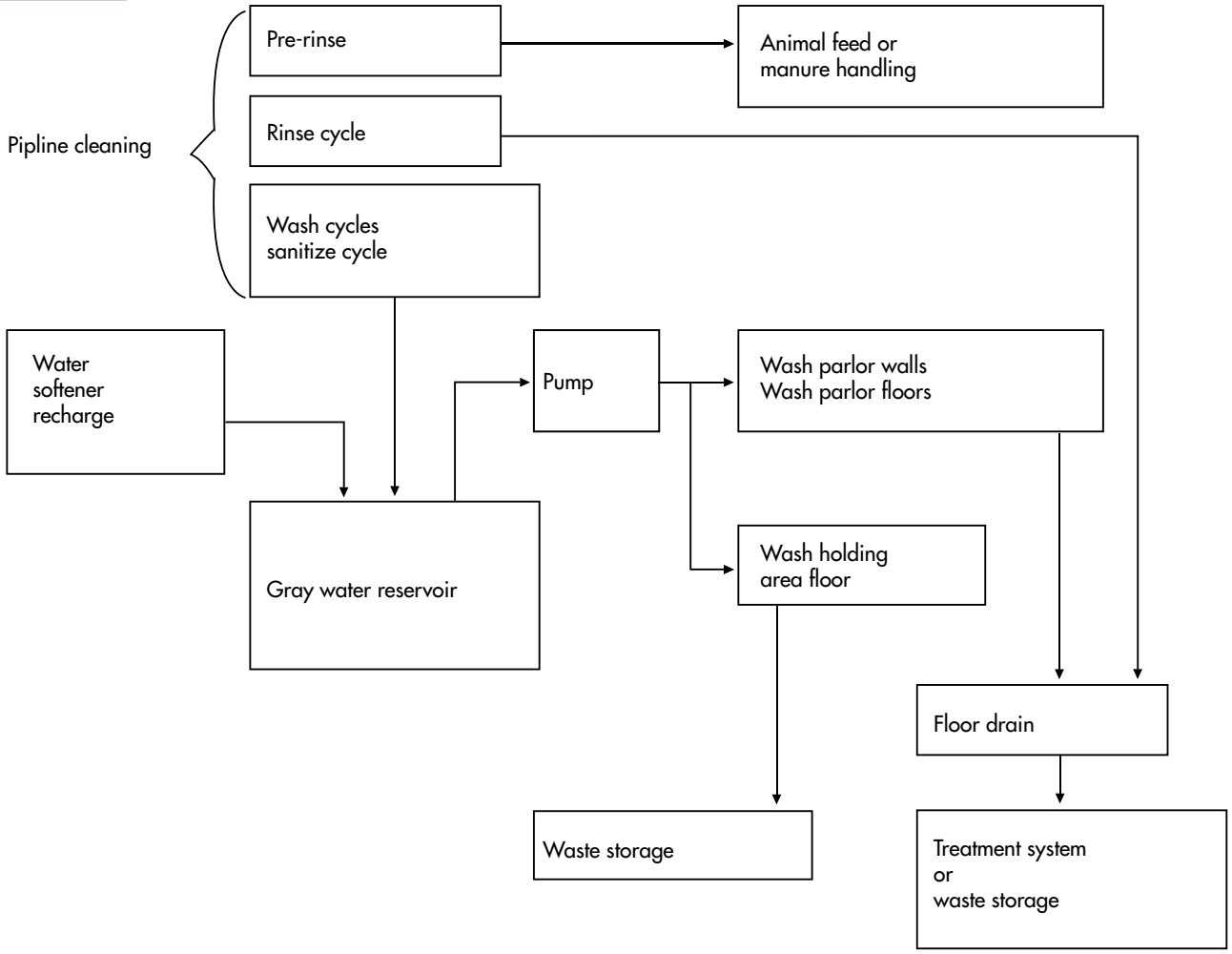

14. Reuse water softener wastewater

Wastewater generated during water softening is suitable for washing milking center floors and walls. With appropriate plumbing, it can be diverted to a reservoir tank to be reused for milkhouse, milking parlor and holding area washdown (Figure 5).

Waste Milk Management

15. Dispose of colostrum and transitional milk

Colostrum and transitional milk are produced during the first five days of lactation. This milk is not legally saleable and must be disposed of on-farm. Guidelines for storing and feeding colostrum and transitional milk to calves are published by Hoffman and Plourd, 2003. This milk can also be fed to hogs, mixed with manure or land spread. Producers may be able to sell high quality colostrums or transitional milks to calf rearing operations or feed manufacturing firms.

16. Mastitic milk and milk from cows treated with antibiotics

Milk from cows with mastitis or those recently treated with antibiotics is not saleable. Milk from treated cows must be withheld for the period recommended by the drug manufacturer (at least two days after treatment). Some mastitic milk and milk from antibiotic-treated cows can be fed to calves or hogs (Hoffman and Plourd , 2003). Otherwise, it should be mixed with manure or land spread. Pasteurization is useful for killing pathogens in waste milk but does not alter antibiotic residue contents in milk (Jorgensen and Hoffman, 2006).

Preventing disease is the best way to reduce the quantity of mastitic and antibiotic-contaminated milk. A herd health management program that addresses causes and prevention of mastitis is recommended (Eberhart et al., 1987).

17. Milk spills, bulk tank failures and rejected bulk tank loads

Spills that occur when valves are inadvertently left open, cooling systems failure or milk from antibiotic-treated cows that is accidentally added to the bulk tank can generate large quantities of waste milk. This milk can be pumped or hauled to manure storage or other long-term waste storage facilities. Land spreading is recommended as the final disposal method.

Large quantities of milk sometimes enter milking center drains before milk spills are detected (e.g., when the bulk tank valve is left open during milking). Unless the drain leads to manure storage, as much of this milk as possible should be removed to prevent wastewater disposal system failure. For example, if large quantities of milk enter a settling/floatation tank, immediate pumping of the tank is indicated. In parlor systems, directing the floor drain serving the bulk tank onto the parlor floor will alert the operator to an open bulk tank valve during milking.

18. Remove pipeline and bulk tank residual milk

Residual milk between the transfer pump and the bulk tank is removed by pre-rinsing as above. In most cases it can also be collected by turning off the vacuum pump at the end of milking, causing a valve at the pump to open and allowing the milk above the pump to drain out (Figure 7)

Increasing milk delivery to the bulk tank can reduce pipeline waste milk. Sanitary air systems, simplified pipeline geometry and greater pipeline slope all serve to increase milk delivery. Flat-barn and parlor milking systems (Reinemann et al., 1992) generate less waste milk than around-the-barn pipelines. Milking equipment specialists can suggest improvements to existing milking systems.

19. Pre-rinse milk pipelines and bulk tanks

One to five gallons of milk remain in pipelines and receiver groups after milking. Pre-rinsing milking units and pipelines, and recovering the rinsate at the wash sink, is a simple, cost-effective procedure that captures up to 90% of the residual milk. (Anderson, 1992).

Pre-rinsing can be accomplished manually by drawing five gallons of warm water (95° to 120°F) through milking units into the pipeline. The pipeline is then drained by opening the wash valve, and switching to the milk transfer pump. The milky pre-rinse solution is captured in a bucket at the wash sink. Pre-rinsing can be programmed into some clean-in-place systems, and a diverter valve (Figure 6) can be installed to automatically divert the pre-rinse to a bucket. Pre-rinsing the bulk tank with a high-pressure hose after milk pick-up and capturing the rinsate is also recommended.

Milk collected by pre-rinsing can be fed to calves or hogs if it is not too watery or contaminated with cleaning chemicals. If it is not fed to animals, it should be delivered to manure storage or spread on land.

Pre-rinsing pipelines with five gallons of warm water removes 90% of milk left in pipelines, milking units and receiver groups after milking. Pre-rinsing can be accomplished manually and programmed into some CIP systems. A diverter valve can be installed to automatically divert the rinsate to a bucket. Bulk tanks should also be pre-rinsed and the rinsate diverted away from milking center drains (Figures 7 & 8).

Diverter Valves Used to Capture First Rinse **FIGURE 6**

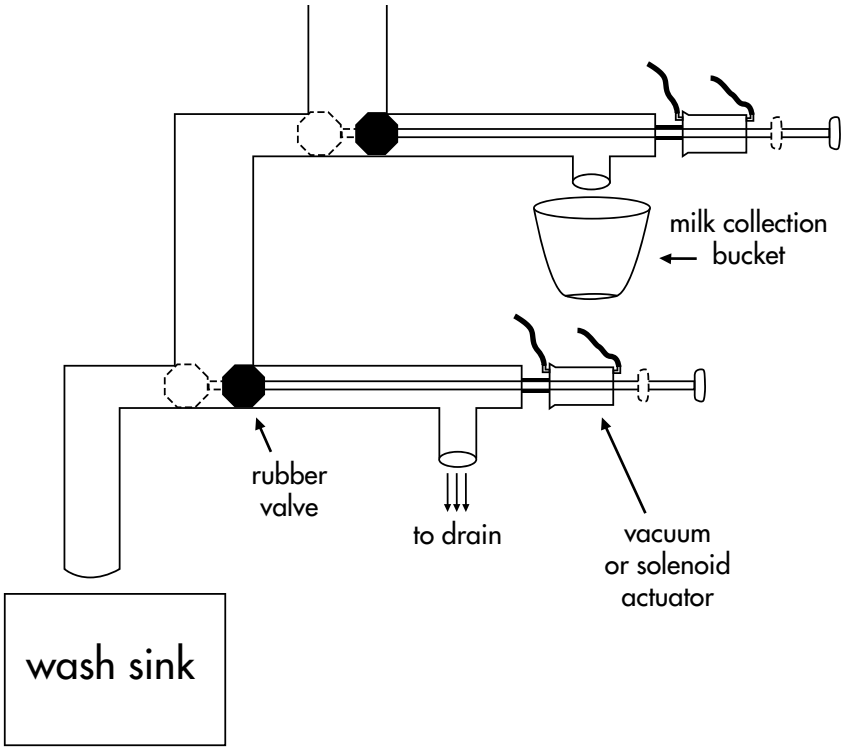

20. Simplify milk pipeline geometry

Elements of pipeline design such as elevation, slope, length and complexity affect milking. Many of the worst problems with milking machine cleaning and milking performance are the result of installing a milking machine in a building not designed for it. Every extra foot of pipe and hose adds complication for control of the system, for both milking and cleaning, in addition to extra water required to clean the system. When considering options for parlor layout select a design that minimizes milkline, wash line and airline lengths. This can be accomplished by keeping the receiver, wash sink and bulk tank or tanker port as close together as possible. The receiver should not be placed in a location that will interfere with movement of the operators during milking. The wash sink is generally located near the bulk tank inlet to facilitate piping to switch between the milking and cleaning configurations. The length of piping from the milk room to the parlor should be kept to a minimum to reduce cleaning water volume, heat loss during cleaning and difficulties controlling circulation. Extra equipment such as milk meters and back flush systems require additional up-front cost as well as ongoing costs for maintenance and cleaning. Additional components also make control of milking and cleaning performance more difficult. Consider if there will be sufficient cash flow to keep equipment maintained.

If the design of the milking system is not considered carefully the amount of water required to clean the system can easily double or triple, with the majority of water used to fill washwater draw lines from the wash vat to the milking machine. The water requirements for cleaning a milking machine can be estimated using the guidelines presented by Reinemann et. al. 2003. See Table 7.

Determine the minimum water volume required per wash cycle for proper flow dynamics in air-injected milking systems. Use this estimate to size wash sinks in new systems or to check if the actual water used per cycle meets the minimum requirement. The requirement for milk meters, wash vats and pre-coolers are approximate and may vary with different component designs. If air injection is not used, multiply the total gallons for the milk line by three. If weigh jars are used, multiply the milk meter gallons by four.

21. Collect waste milk below milk transfer pump

Milk collected by pre-rinsing can be fed to calves or hogs if it is not too watery or contaminated with cleaning chemicals. If it is not fed to animals, it should be delivered to manure storage or spread on land.

Several gallons of milk may be left between the transfer pump and bulk tank at the end of milking. When the vacuum pump is turned off at the end of milking, a valve at the pump opens and milk drains out. The milk can usually be collected in a bucket (Figure 7).

In some low-line systems, a sump pit (10 to 20 gallons capacity) may need to be constructed below the transfer pump (Figure 8). A sump pump and pipeline can be installed to divert the milk to an appropriate destination such as manure storage or a manure spreader. Installing a drain through which some CIP wastewater is delivered to the sump pit can automatically clean this system.

Table 7 *Worksheet for Estimating Water Requirements for a Milking System Cleaning Cycle*

Feet of Milk Line	Diameter (inches)	Multiplier (Gal/Cycle/Ft)	Gallons/Cycle
	4	0.12	
	3	0.07	
	2.5	0.05	
	2	0.03	
	1.5	0.02	
Feet of Wash Draw & Milk Transfer Line	**Diameter (inches)**	**Multiplier (Gal/Cycle/Ft)**	
	3	0.34	
	2.5	0.23	
	2	0.15	
	1.5	0.09	
Receiver(s) Volume (gal)		**Multiplier (Gallons/Cycle/ Receiver)**	
		0.33	
Number of Milking Units		**Multiplier (Gal/Cycle/Unit)**	
		0.25	
Number of Milking Meters		**Multiplier (Gal/Cycle/Meter)**	
		0.25	
Feet of Milk Hose	**Hose Diameter (inches)**	**Multiplier (Gal/Cycle/Ft)**	
	9/16	0.012	
	5/8	0.016	
Number of Pre-coolers		**Multiplier (Gallons/Cycle/ Pre-cooler)**	
		2	
Number of Wash Vats		**Multiplier (Gallons/Cycle/ Wash Vats)**	
		8	
TOTAL GALLONS/CYCLE			

22. Remove milk from transfer line with compressed air

Residual milk downstream from the transfer pump can be blown into the bulk tank under sanitary conditions (Figure 9). This requires a ball check valve be installed beyond the pump. Sanitary air is then injected after the valve. Due to expense, this system is practical for larger dairies only.

FIGURE 7 **Pails to Capture Drained Milk**

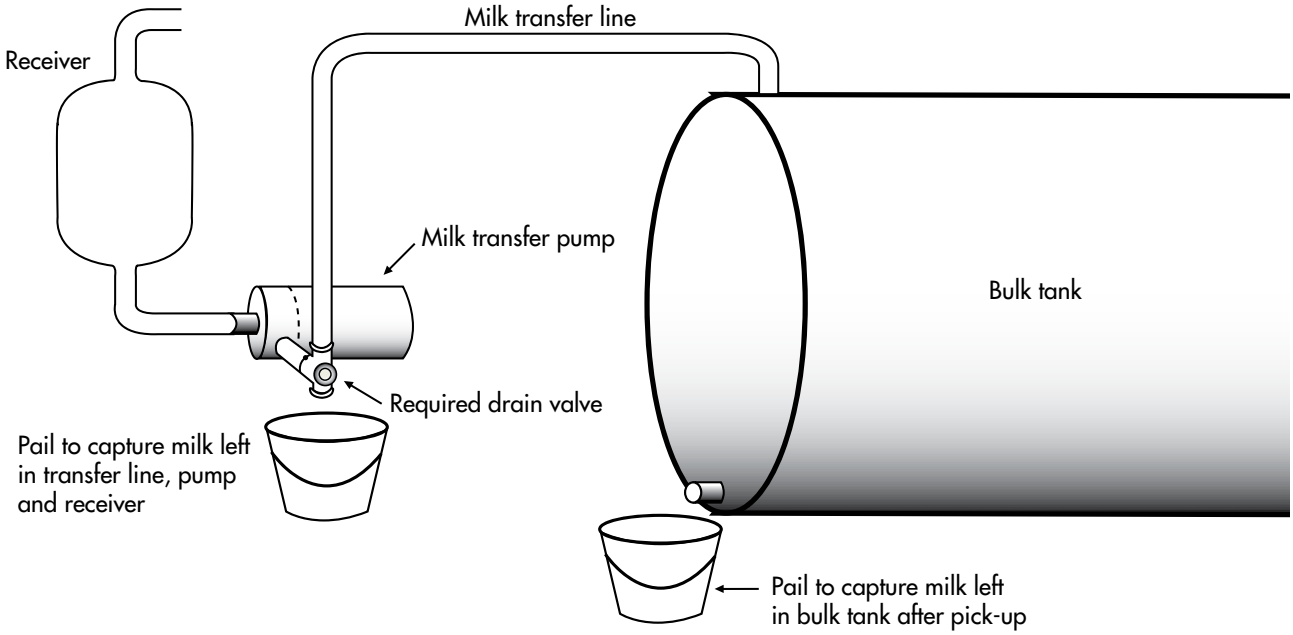

- Drain valve to help capture milk from tranfer line before rinsing pipeline.
- Locate at the lowest point of the system, usually near the milk pump.
- Before rinsing, turn off vacuum system to capture milk in the pail.
- Place pail under bulk tank discharge to capture drain down.
- Feed milk or dispose with manure.

FIGURE 8 **Sump to Collect Waste Milk**

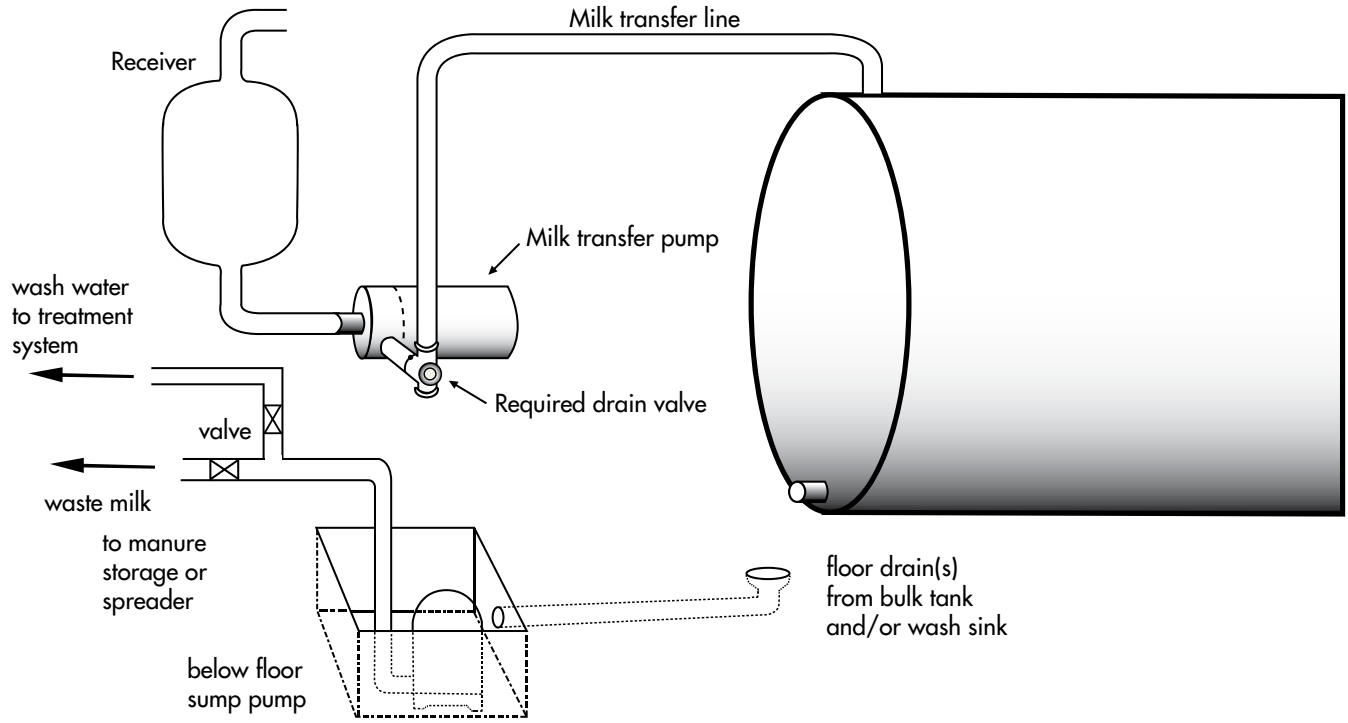

FIGURE 9 **Milk Transfer to Bulk Tank with Compressed Air Following Milking**

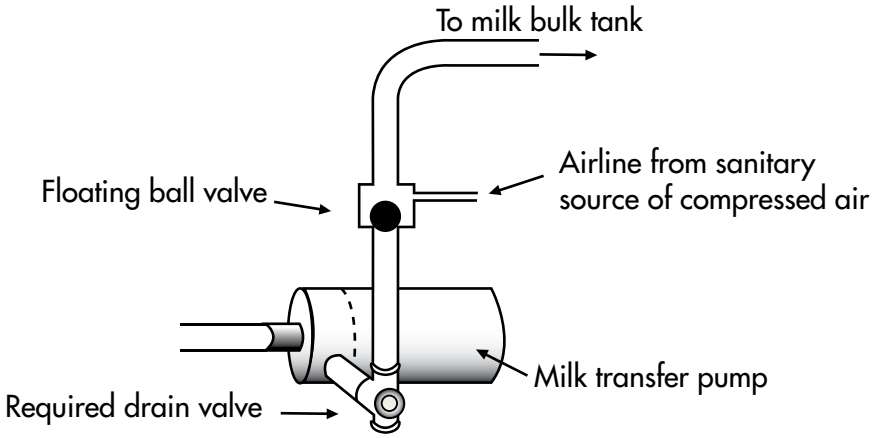

Phosphorus Reduction

23. Install a water softener or increase softening time

Water in Wisconsin tends to be hard because it contains substantial amounts of dissolved calcium, magnesium and iron. As water hardness increases, the effectiveness of detergents decreases, and larger quantities of detergent are required to get the cleaning job done.

Water softeners work by replacing magnesium, calcium and iron with sodium. Softening the water used in the milking center decreases detergent requirements for milking system cleaning. It also reduces mineral buildup (scaling) on water heater surfaces, so water heaters are more energy efficient and last longer.

Detergents used to clean milking equipment work well at a hardness of less than or equal to 20 grains per gallon (gpg), so a water softener is useful for conserving detergents when water contains more than 20 gpg of hardness.

Iron contributes to water hardness, and can stain fixtures. Iron content exceeding 10 mg/L (0.6 gpg), can foul a water softener. An iron filter can be fitted to the water softener. Filters will remove the oxidized form of iron (rust particles). More elaborate water treatment systems may be necessary if other forms of iron are present or high iron concentrations exist. Consult a water treatment specialist is these cases.

To obtain the full benefits of a water softener and/or iron filter, make appropriate reductions in cleaning chemical use after installation.

24. Use low phosphorous detergents and acid rinses

Detergent and acid rinses containing reduced amounts of phosphorus are available. Many of these products contain half as much phosphorus as traditional chemical cleaners but are equally effective if washwater is adequately softened (less than or equal to 20 gpg). Careful water softener maintenance is required when using these chemicals.

Washwater-conserving devices that may also reduce phosphorous discharge via decreased chemical requirements include CIP systems (Table 6, no. 2), wash volume adjustment (Table 6, no. 3) manifolds (Table 6, no. 4) and air injectors (Table 6, no. 5). Practices that can reduce phosphorous as well as conserve water include reducing pipeline washwater volume (Table 6, no. 3) and reusing CIP waste-water (Table 6, no. 13). All methods that keep waste milk out of the system will reduce phosphorus loads (Table 6, nos. 15-22).

section 5

WASTEWATER MANAGEMENT ALTERNATIVES & DESIGN EXAMPLES

The design criteria and requirements of Standard 629 may not satisfy the stringent requirements of a Wisconsin Pollution Discharge Elimination System (WPDES) Permit. Consequently, it should not be used as the basis of design for operations requiring that permit.

Overview of Disposal Systems

Milking center wastewater disposal systems are designed to take in wastewater and reduce contaminants. Environmental risks associated with discharge are lessened by some of these processes:

- Decomposition of organic material caused by bacteria
- Precipitation, absorption, adsorption and filtering of contaminants within the soil; and
- Uptake of nutrients by plants

All wastewater disposal systems require a land discharge location, which may be above or below the surface. Surface discharge is either intensive (wastewater applied at a high rate to a small area specifically designed to accept it) or non-intensive (wastewater applied at a lower rate over a large area such as a crop field). Subsurface discharge is generally intensive. Disposal systems also require a method for delivering wastewater to the discharge site, and some have additional facilities for wastewater treatment and storage (Table 8). Also see Appendix A, Table 4, *Treatment Options Comparison Chart*.

Table 8 *Disposal Systems*

Treatment System	Pre-treatment	Options
Storage	N	Long-term manure storage
Frequent Haul	N	Short-term storage
Ridge and Furrow	Y	Single or multiple furrows
Constructed Wetland	Y	Single or multiple cells Liner options – Follow pond sealing, flexible membrane NRCS 521A standard or pond sealing or lining, bentonite sealant, NRCS 521C standard or 1 ft. thick clay liner. Discharge location: – Filter strip following NRCS 635 standard – Manure storage following NRCS 313 standard – Treatment system following NRCS 629 standard – Recirculated to constructed wetland
Subsurface Absorption System	Y	Soil cover, organic matter cover
Buffer Process	Y	Base filter area on the greater of : flow through time or loading rate

The failure of a milking center wastewater disposal system threatens surface and groundwater quality and causes inconvenience and expense. Possible reasons for failure include improper siting, design, or construction, and poor milking center wastewater management. Circumstances or practices that often predispose a system to fail are:

- Incompatibility of the site with the type of disposal system
- Faulty initial estimates of wastewater volume and strength
- Changes in management, equipment or herd size that alter wastewater characteristics
- Inadequate disposal system maintenance
- Poorly designed milking facilities
- Practices causing increased cleaning requirements
- Wasteful cleaning practices that cause excessive wastewater volume and strength
- Poor waste milk management
- Accidental discharges of milk into the system.

Systems that are compatible with local soil conditions and wastewater disposal needs tend to operate satisfactorily. Decreasing wastewater strength and volume inside the milking center allows construction of relatively less expensive disposal systems for new installations and can extend the life of existing systems (Anderson, 1992). See Source Control, Section 4.

Planning wastewater disposal system upgrades or new installations requires assessing site characteristics, current disposal needs and facilities, and the potential for expansion. A holistic approach that takes milking center design and management practices into account is recommended.

Site characteristics that are important in selecting and designing a disposal system include (EPA, 1981):

- Soil type
- Permeability of the most impermeable subsoil horizon
- Infiltration
- Drainage
- Soil depth
- Slope
- Distance to groundwater

During the planning stage of the disposal system it is important to consider the potential need to expand. To remain competitive and financially viable, farmers should develop 15 to 20 year plans that include milking system upgrades or replacements and a 50% to 100% increase in herd size (T. Smith, 1992). Therefore, it is important to consider wastewater disposal system flexibility and expansion capacity during the planning stage.

Milking Center Wastewater Disposal System Options

There are several disposal system designs that can be used. These systems vary widely in their adaptability to milking center size and design, ability to reduce contaminants, siting requirements, costs and management needs.

The six disposal system designs are: manure storage, frequent haul, ridge and furrow, constructed wetland, subsurface absorption system, and buffer process.

Manure Storage

Where a liquid manure storage system is used on a farm and it has sufficient capacity, milking center wastewater should be stored with the manure. This will eliminate the need for the more management-intensive systems described in Standard 629. The milking center wastewater will reduce the solids content of manure, making it more easily pumped. However, waste milk can contribute to the odors associated with stored manure.

The manure storage option is especially well suited to large farms where milking center wastewater exceeds 500 gallons/day, because at these discharge levels rates, intensive wastewater disposal is impractical and unreliable. Non-intensively applying liquid manure wastes to the land (by irrigating, injecting, or spreading) is the most environmentally sound way to dispose of milking center wastewater, if the process is properly managed. Proper management involves wastewater incorporation, application rate, soil condition, soil nutrient level and the separation distance to waterways.

Milking center wastewater can be delivered to manure spreaders for frequent hauling with short-term storage for land application (Figure 10) or to long-term manure storage facilities (Figure 11). The latter provides the flexibility of long-term wastewater storage until land application is appropriate. Wastewater can be combined with manure inside reception pits before being pumped to spreaders or storage, or it can be pumped separately. Delivering wastewater to storage can also be accomplished by gravity flow if storage facilities are located down slope from the milking center. Wastewater transfer lines should be buried, or sloped to drain completely to avoid freezing.

Combine Milking Center Wastewater with Manure for Frequent Haul **FIGURE 10**

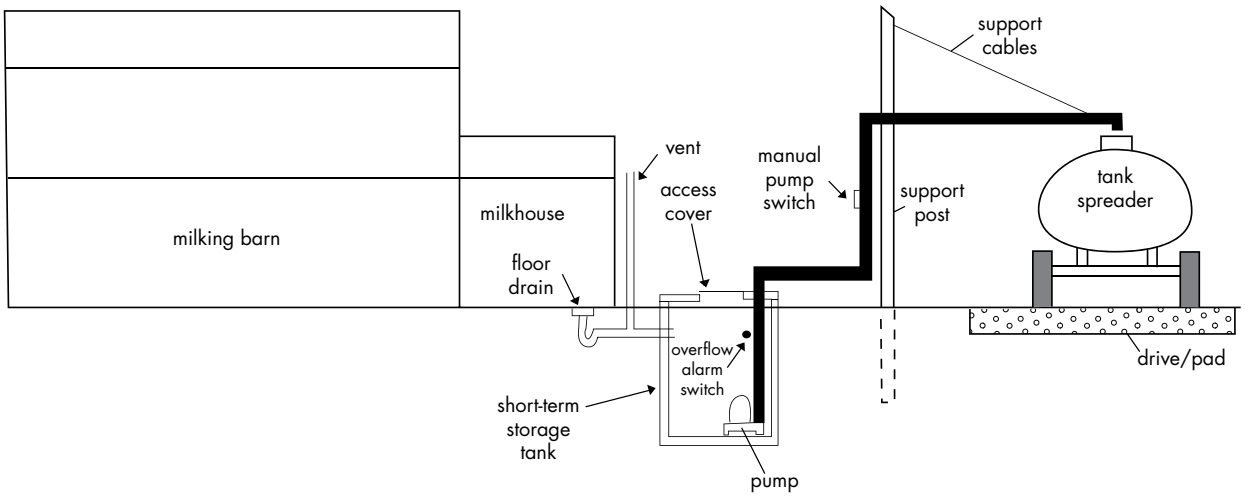

If manure holding or storage facilities are large enough to handle milking center wastewater, source control is generally not needed to protect water quality. Some source control practices and devices (for example, those that reduce chemical cleaner use or increase milk recovery) may still bring some cost-savings. Decreasing water use can extend the capacity of manure storages and reduce field hauling, but the effects on manure pumpability should be considered.

An accurate estimate of the daily wastewater generated is necessary when designing a liquid manure storage facility. Measuring water use with meters or estimating use during cleaning is recommended. Refer to the Milking Center Waste Volume Spreadsheet posted on the Wisconsin NRCS webpage with other engineering spreadsheets at: **www.wi.nrcs.usda.gov/technical/eng_spreads.html**

Combine Milking Center Wastewater with Manure for Long Term Storage **FIGURE 11**

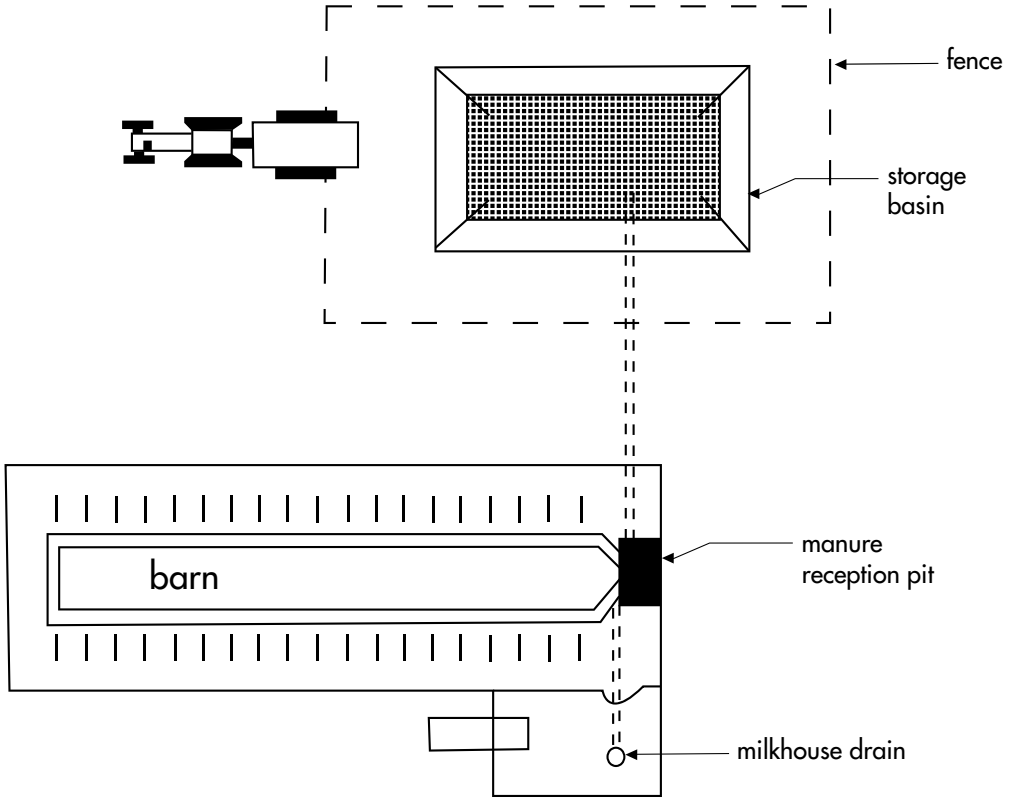

Frequent Haul - Low Intensity Land Application

A system that involves installing a storage container, providing a pump (Figure 10) and then using a liquid-tight manure spreader to land apply the wastewater can be used at most sites. It can be used when the soils near the barn, or other constraints, do not allow another treatment method. When the wastewater is applied over the whole farm it can be spread thinly and thereby avoid building up high nutrient concentrations.

Wastewater can be applied with any liquid handling equipment. Tank spreaders are good alternatives. Liquid fertilizer tanks mounted on truck beds or trailers can be used as long as field access can be assured. Small amounts of milking center wastewater can be applied daily by loading fairly solid manure on the back of a box spreader and then adding the liquid waste combined with solid manure to fill the spreader.

Storage Containers

Storage containers are used to store milking center wastewater before it is applied to the land. These short-term storage containers must hold 3 to 10 days of wastewater to meet Standard 629. They are good emergency collection vessels for waste milk in the event of spills, pipeline ruptures or bulk tank failures.

Above ground storage containers need to be protected from freezing, damage from collisions, and leakage. Underground storage containers must withstand the earth pressure without collapse, be strong enough for any external loading from heavy traffic, and resist buoyancy forces when the container is pumped out and the soil surrounding it is saturated.

The pump required to unload the tank should be a high-volume, low-head pump able to handle grit and other solids in the waste stream. Submersible trash pumps will likely meet these criteria.

Temporary storage systems require intensive labor because they must be emptied frequently. Managing floor solids is one way for small parlors to avoid excessive sludge buildup, while reducing wastewater volume extends storage capacity. Limiting the milk content of wastewater helps prevent offensive odors.

Temporary wastewater storage systems call for good management and access to quality land spreading areas throughout the year. Wastewater must be hauled and spread during the winter when equipment freeze-ups are a common problem. Since the storage container must be emptied during wet or frozen weather, an action plan should be developed prevent runoff.

Producers should assess their ability to properly manage temporary systems year-round before they make a decision to use this system.

While manholes for access are needed, locks should be installed to restrict access and avoid accidents. The gases that build up in enclosed tanks can kill quickly.

Any tank used in a wastewater treatment system poses a drowning and/or asphyxiation hazard. Enclosed tanks can harbor hydrogen sulfide gas and/or lack sufficient oxygen to support life. Hydrogen sulfide can cause sudden respiratory failure. No one should enter these confined spaces without a self-contained breathing device and sufficient help on the outside to extract them from the tank. Use fences to keep people and animals from entering open tanks. Use secured covers to exclude people and animals from enclosed tanks. Locate warning signs to alert others to the dangers. The American Society of Agricultural and Biological Engineers (ASABE) uses a standard for developing warning signs (ASAE S441.3 Safety Signs, Power and Machinery Division Standards Committee, 2005). ASABE also has a manure storage safety engineering practice (ASAE EP470 Manure Storage Safety, Swine Housing Committee, 2005). See also chapter 13 of Agricultural Waste Management Field Handbook (USDA Natural Resources Conservation Servic. 1996. Agricultural Waste Management Field Handbook).

Pre-treatment Tank

Pre-treating wastewater is required under the 629 Standard for disposal systems featuring intensive land application, such as wastewater treatment, buffers, ridge and furrow areas, and subsurface absorption fields. During pre-treatment, heavy solids settle out in a sludge layer, and lighter materials like milk fats and grease collect in a floating scum layer. Anaerobic bacteria begin to digest organic matter. The liquid between the scum and sludge layers is drawn off for further treatment and disposal. Pre-treatment tanks require periodic sludge and scum removal.

Settling/flotation (S/F) tanks use baffled inlets and outlets designed to minimize turbulence and prevent particle re-suspension (Figure 12). They also include ports for pumping out sludge and scum. If two S/F tanks are connected in series, the second tank can provide reserve capacity and serve as a pump chamber. Pumps equipped with float switches allow automatic delivery of pretreated wastewater to treatment systems. When designing an S/F tank, it is important to:

- Provide enough capacity
- Consider using two compartments with appropriately placed baffles (Figure 12b), inlets and outlets to encourage settling and minimize solids discharge (EPA, 1980)
- Construct ports that allow for convenient sludge and scum removal
- Bury inlet and outlet pipes to prevent freezing.

The 629 Standard requires pre-treatment tanks be selected from the current list of the Wisconsin Department of Commerce (DCOMM) Plumbing Product Approvals or Alternative Product Approvals list. For more information contact a county DCOMM office listed at **http://commerce.wi.gov/SB/SB-DivContacts.html**. The design must comply with all liquid tightness and structural strength stipulations listed in the DCOMM approval. The tank must be located farther than 25 feet from any established or future roadway.

FIGURE 12a **Settling/Flotation Tank with Baffled Inlets & Outlets, One -Chamber**

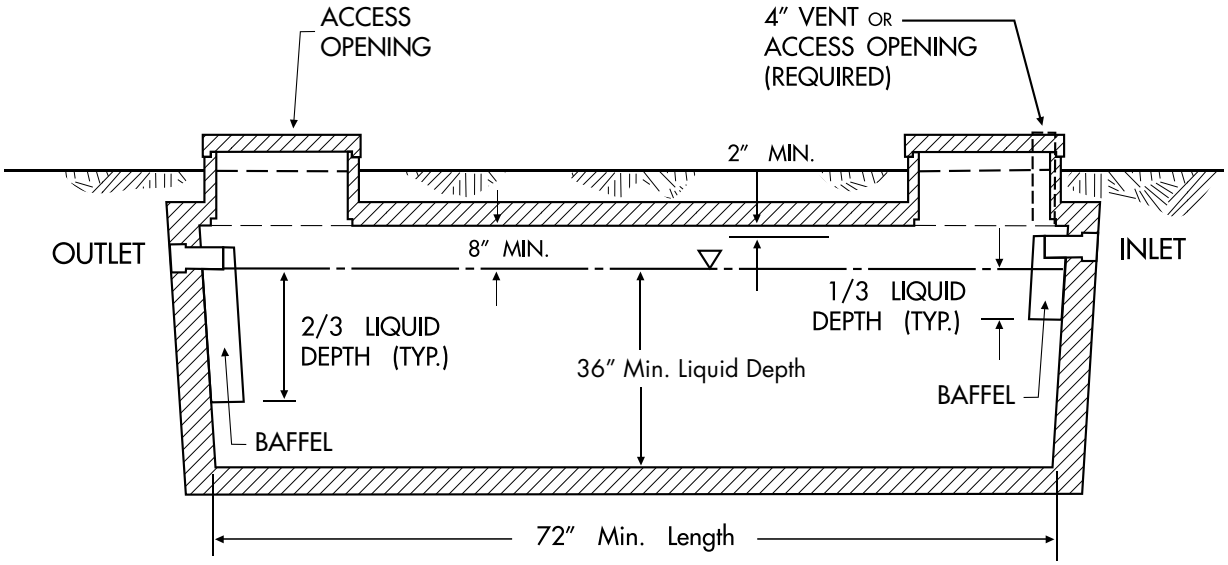

Settling/Flotation Tank with Baffled Inlets & Outlets, Two-Chamber **FIGURE 12b**

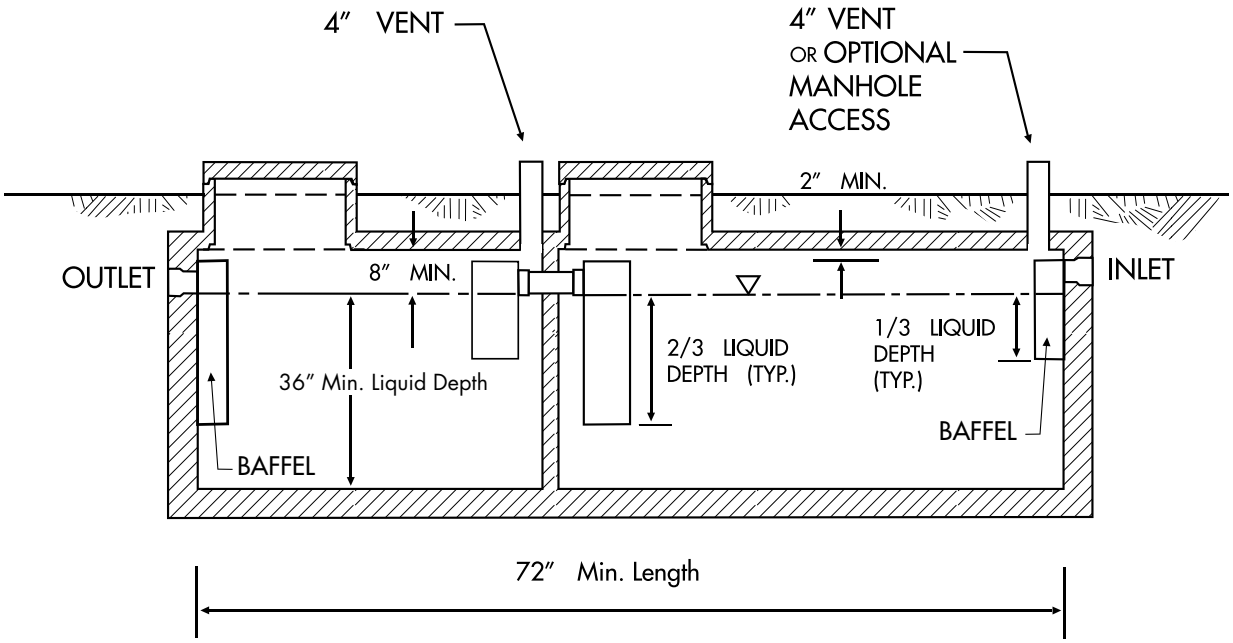

Stipulations in the DCOMM approval that are unrelated to structural integrity or liquid tightness can be waived at the discretion of the designer. An example of such a stipulation would be a requirement for an effluent filter on the discharge pipe. It is expected that an effluent filter in a milking center wastewater application would quickly plug, and therefore should not be installed.

Settling/flotation tanks treat waste milk to a very limited degree. Waste milk must be managed carefully to maintain a reasonable clean-out frequency for the pretreatment tank. (See Appendix A, Worksheet 3. Standard 629 requires waste milk not be discarded into the pre-treatment tank).

Soil Infiltration Systems

Ridge and Furrow

Ridge and furrow systems have been used to dispose of wastewater from dairy processing and meat packing plants. They are inexpensive and require little management. They also perform well in cold weather because thick vegetation and wastewater in the channels maintains infiltration.

Ridge and furrow systems are intensive land application systems that rely on soil infiltration. There is a risk of groundwater pollution if ridge and furrow systems are improperly installed or maintained. Important design considerations include wastewater characteristics (BOD and solids, nitrate and inorganic ion content), hydraulic loading rate and soil conditions. Wastewater is discharged into narrow, trapezoidal channels (1 ft bottom width × 1 ft depth × 2 ft top width) arranged in fields (Figure13a). Header ditch with diverters can direct wastewater into individual channels for treatment. Periodic dosing allows wastewater to infiltrate quickly, organic matter to decompose under aerobic conditions and unsaturated conditions to reestablish before the next dosing. Several methods can be used to dose the furrows. The simplest to operate is a dosing siphon or pump chamber (Figure 13a or 13b) with enough storage capacity to hold multiple daily discharges until the dosing period is reached and the waste is discharged to the furrows. Manual valves (Figure 13a & 13b) can be used to dose a different furrow each day, however,these will require a dedicated operator to adjust the valves once per day. Automated valves can perform the same switching process as the manual valves, thus eliminating daily management. These valves should have a filter installed upstream to improve reliability.

Vegetation helps to evapotranspire the moisture from the furrow soil and to deliver some oxygen to the soil through the roots. Vegetation should be established between channels for stabilization and nutrient uptake. Semiannual cutting and removal of vegetation is recommended.

Manual Controlled Gravity Flow Dosing of Ridge & Furrow System **FIGURE 13a**

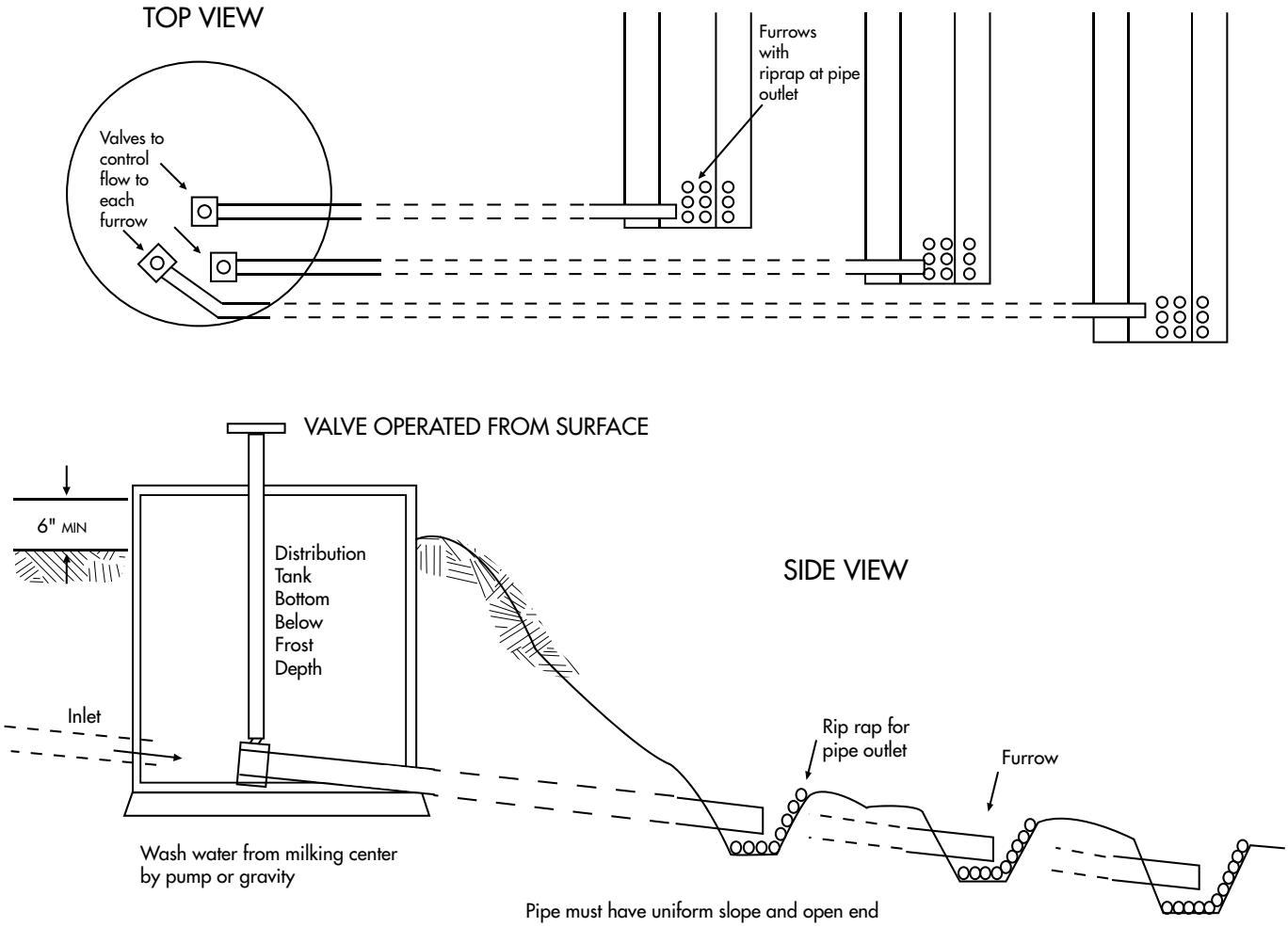

FIGURE 13b **Manual Controlled Pressure Dosing of Ridge & Furrow System**

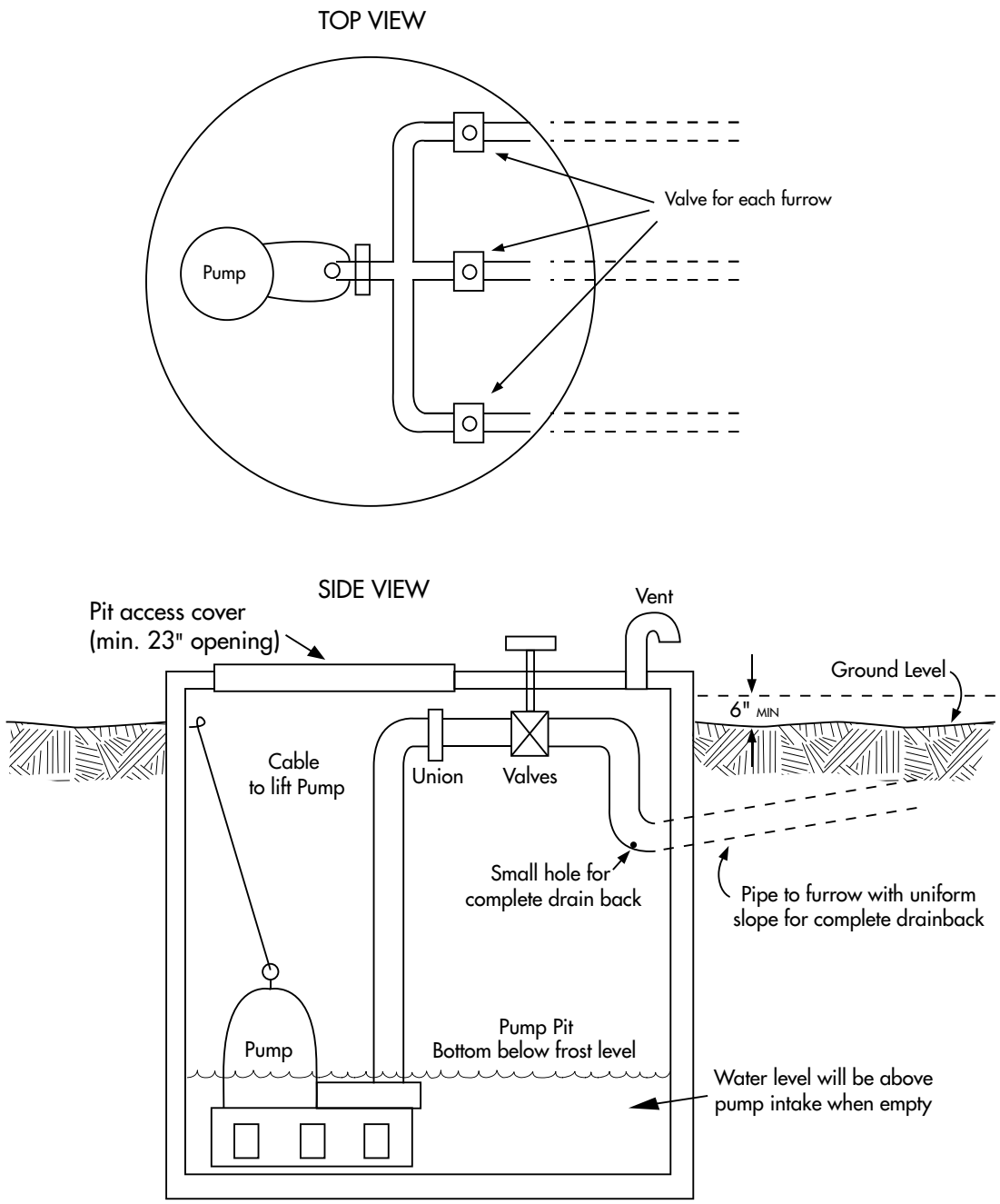

Design Example: Ridge and Furrow

Assume a milking center discharges an average of 400 gallons of wastewater per day and there is a pretreatment tank with three days storage capacity of 1,200 gallons. Since the furrow bottom is one-foot wide and the design-loading rate is 1.5 gallons per square foot of furrow bottom for a three-day cycle, a single cell furrow must be at least 800 feet long (see Calculation A). In the same situation with a dosing chamber capacity of 400 gallons, three furrows would be needed with each loaded on a three-day cycle. Each furrow would be at least 267 feet long (see Calculation B). Furrows this long and installed level will likely require installation on the contour. Consult with the farmer/owner about how vegetation will be removed and how much space must be left for equipment access.

Calulation A:

$$\frac{1{,}200\ \text{gal}}{\text{cycle}} \times \frac{\text{ft}}{\text{ft}^2} \times \frac{\text{ft}^2 / \text{day}}{0.5\ \text{gal}} \times \frac{\text{cycle}}{3\ \text{days}} = 800\ \text{ft long}$$

Calculation B:

$$\frac{400\ \text{gal}}{\text{cycle}} \times \frac{\text{ft}}{\text{ft}^2} \times \frac{\text{ft}^2 / \text{day}}{0.5\ \text{gal}} \times \frac{\text{cycle}}{3\ \text{days}} = 267\ \text{ft long}$$

Constructed Wetlands

Using wetlands to treat agricultural wastewater has gained increasing interest due to their low maintenance requirements, adaptability to large operations and high effluent quality. Wetlands are also aesthetically pleasing and attract wildlife.

Constructed wetlands consist of channels into which wastewater is discharged. They differ from ridge and furrow systems in that the channels are wider and are designed to hold water rather than dry out, which allows them to support wetland plant communities. The types of plant communities and the capacity to assimilate pollutants are similar to natural wetlands (Lanier et al., 1991).

The general types of constructed wetlands are: free-water surface systems in which wastewater flows over sediment and through the above-ground plant zone; and vegetated submerged bed systems in which wastewater flows through the bed in contact with plant roots. Wastewater contaminants are removed through sedimentation, filtration, plant uptake and biological decomposition. (See Vegetation Establishment section below). The 629 Standard allows only free-water, surface wetlands.

Constructed wetlands have been demonstrated to effectively treat milking center wastes. A maximum loading rate of 80 pounds of BOD5 per acre per day is required by the 629 Standard. Constructed wetlands are designed with a pre-treatment tank to remove solids that could plug them. Wetlands provide treatment; however, the quality of the wetland effluent at this high loading rate is variable, and therefore is not suitable for direct discharge to waters of the State.

Wetlands treat wastewater aerobically in the surface water and anaerobically in the bottom sediment. They do not produce objectionable odors. Wetland plants provide sites for the bacteria to cling to as they digest the waste. The plants also add oxygen to the microenvironment at the root hairs that helps breakdown organic matter in the wetland.

Wetlands are constructed on impermeable soil, or with an impermeable liner. Most are designed to be shallow ponds in series. It has been proposed to alternate wetlands between shallow aerobic ponds, to increase mineralization of ammonia, and deeper anaerobic ponds, to denitrify the effluent (Figures 14 & 15a). Before final discharge, effluent from the anaerobic ponds is directed to another shallow aerobic wetland to further treat (polish) the effluent.

A constructed wetland can have an evapotranspiration (ET) rate during the warm season that exceeds the precipitation and wastewater delivery rate. However, snow and ice melt can result in a discharge during winter and spring. The excess wastewater can be stored during periods of overflow to be returned to the inlet of the wetland during high ET periods. This system can then act as a no discharge system except when precipitation periods are above design values. When this occurs, some wastewater from storage will have to be field applied.

Constructed Wetland - Plan View **FIGURE 14**

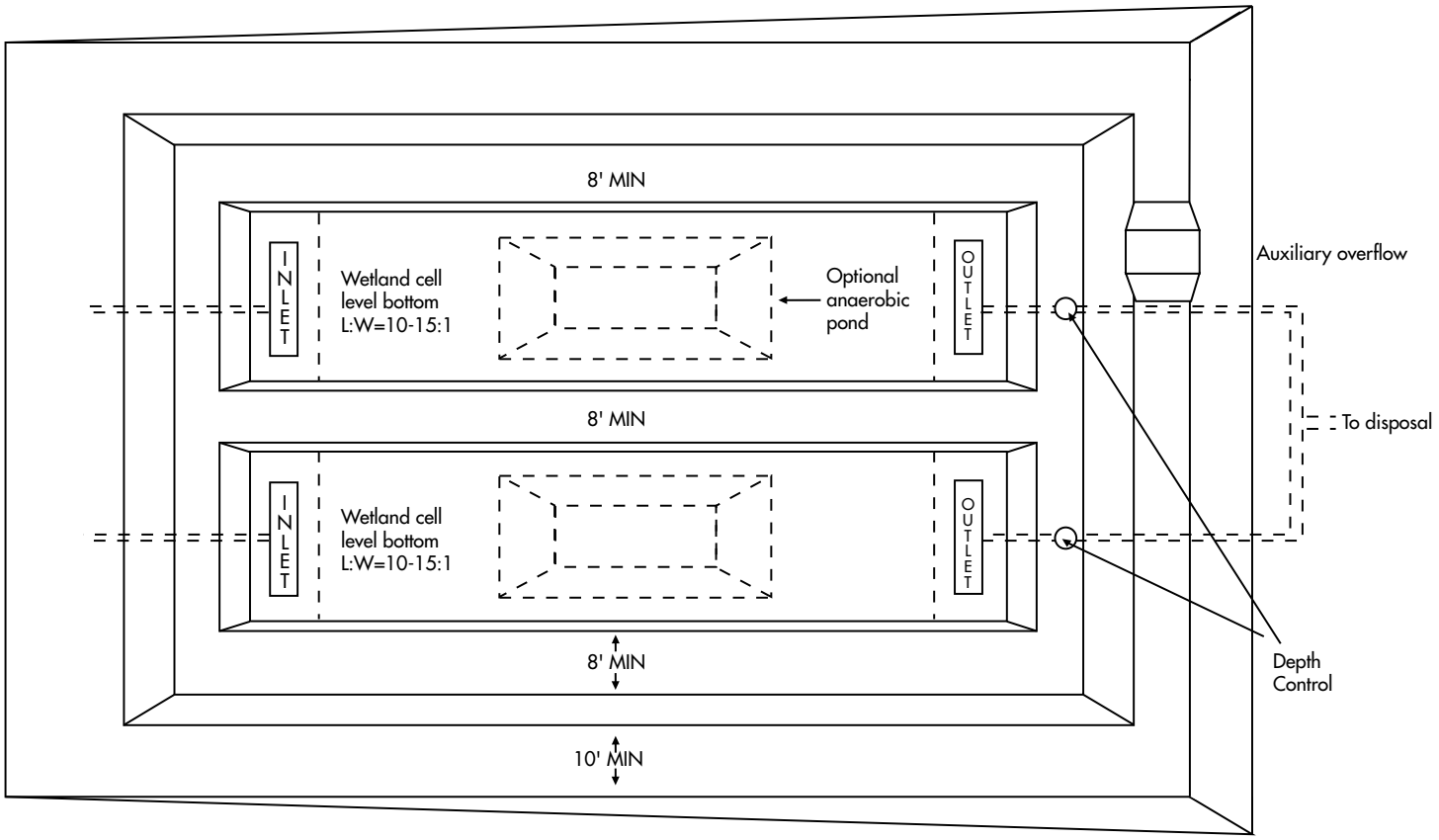

FIGURE 15a **Constructed Wetland - Cross Section**

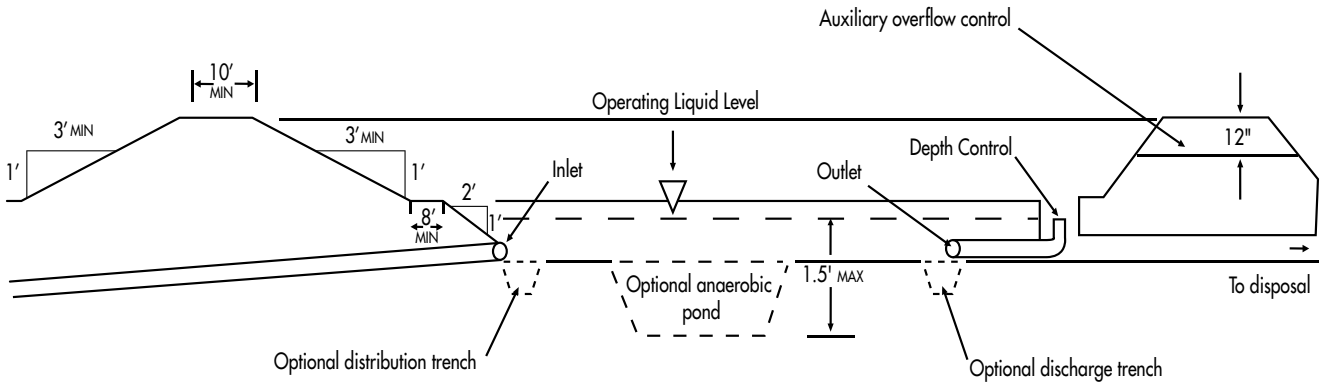

FIGURE 15b **Constructed Wetland Inlet Option Detail (3-dimensional cross section)**

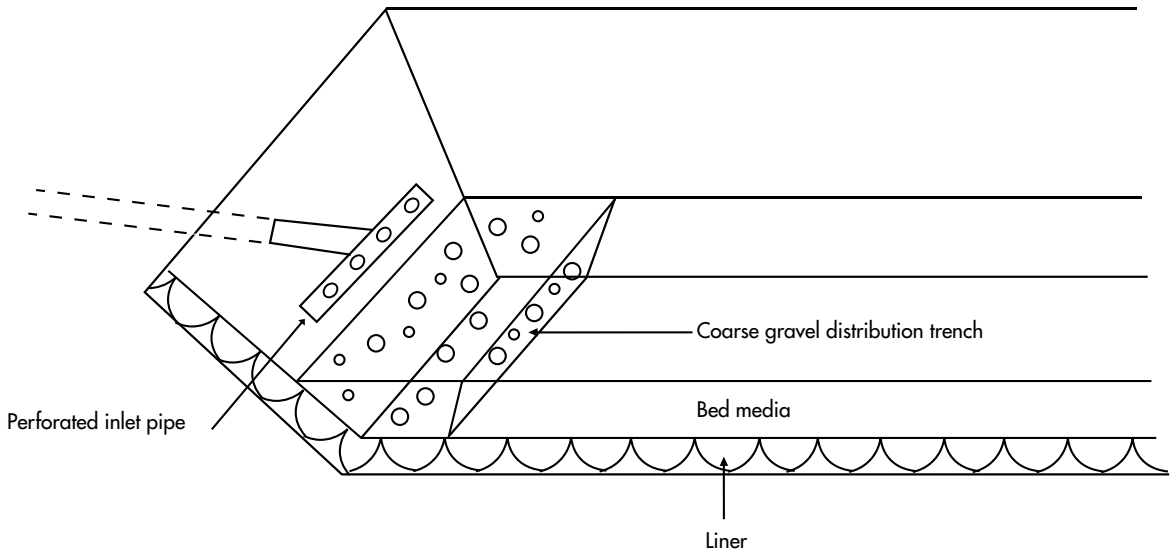

FIGURE 15c **Constructed Wetland - Outlet Option / Detail Cross Section**

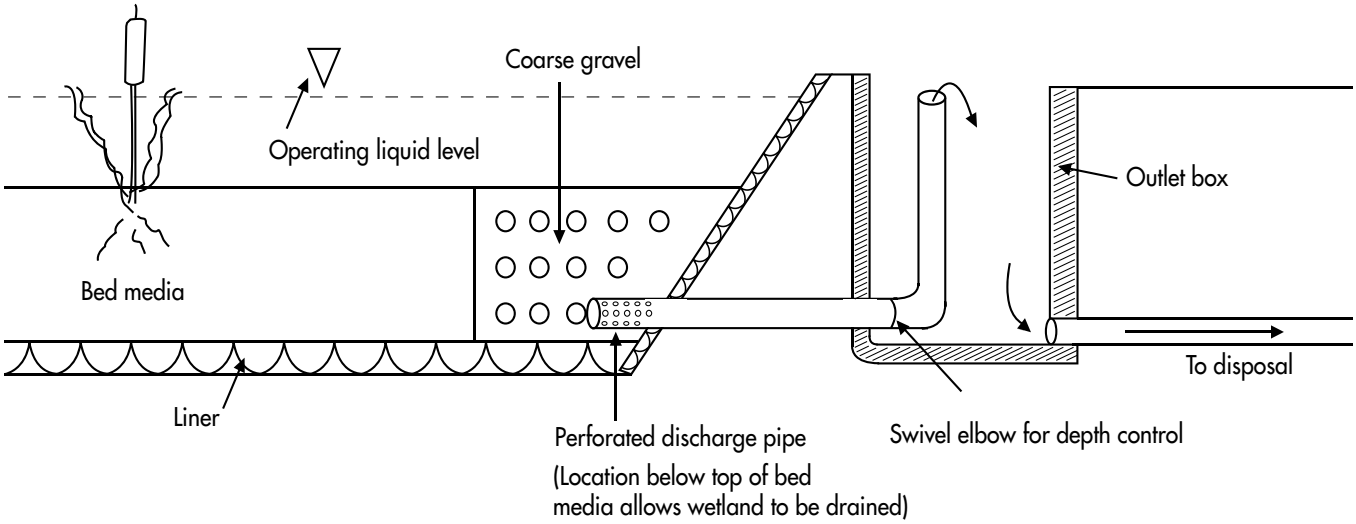

Vegetation Establishment

Choosing the species of vegetation to establish is the first step, and depends on the goals and objectives for the wetland. Ideally, vegetation should include a variety of species; however, constructed wetlands for treating wastewater need to be as versatile and easily maintained as possible. For practical reasons the hardies, most commonly found plant species should be selected.

Literature about characteristics and requirements of various wetland plants is available. However, research has found that cattails have proven to be low cost, easy to establish, low maintenance, and tolerant of a wide range of climatic and contamination conditions. Cattails can tolerate drought conditions for several weeks. Broadleaf cattails (*Typha latifolia*) can withstand water depths up to 18 inches and narrow leaf cattails (*Typha angustifolia*) up to 12 inches. This makes control of water levels less critical for vegetation. The next most versatile and easily managed plants would be various species of bulrush (*Scirpus*). Other suitable species are provided in Table 9.

Other plants that would do well in constructed wetlands include cattails, soft rushes, marsh marigolds, burr reeds, water iris, hyacinths, duckweed, bulrushes, pond lilies, horsetail (*Equisatum sp.*) and arrowhead. Some suggested species for planting include: northern blue flag, (*Iris versicolor*), hard-stem bulrush, (*Scirpus fluviatilis*), giant bur-reed, (*Sparganium eurycarpum*), lake sedge, (*Carex lacustris*), river-bulrush, (*Scirpus validus*), pickerel-weed, (*Pontederia cordata*), common arrowhead (*Sagittaria latifolia*), soft-stem bulrush, (*Scirpus validus*). Refer to Table 9 for recommended plants and seeds.

Simeral (1998) says determining the method of establishment is the next step after choosing the vegetation type.

There are three establishment methods to choose from: natural evolution, mechanical seeding, and transplantation of rhizomes, stolons or entire plants. When determining which method to use consider the following:

- Natural evolution: From work done by Mitsch, 1996, there is evidence that over a period of three or more years, a constructed wetland left to evolve on its own will equal or surpass wetlands that were deliberately seeded or planted. The success of this method depends greatly on the source of the establishment water and the proximity of the constructed wetland to naturally occurring wetlands or other aquatic vegetation. Water used to establish a wetland that comes from a stream or pond would evolve more quickly than water from a spring. Natural evolution is the least expensive method. However, most situations do not lend themselves to this method because of the number of years to achieve sufficient vegetative growth. Whatever the source, the water used to initially fill the wetland should be "clean" and not the wastewater that will be treated once the wetland is created. (Simeral, 1998).

- Mechanical seeding "success rates vary because of climatic conditions, water levels, etc. Most plants will not establish from seed in standing water, but do need constantly wet soils." (Simeral, 1998).

- Transplanting rhizomes, stolons, and plants "is perhaps the fastest and most reliable method of establishing vegetation. It is the most expensive if plants are purchased. Obtaining appropriate plant material from local sources such as road drainage ditches, edges of ponds, natural seepage areas, etc., reduces the cost of establishing the wetland. These local plants also tend to be more vigorous and have a higher survival rate than plants brought in from other areas because they are already accustomed to climatic and other environmental factors. Local plants found close to the site are desirable. Some literature (USDA NRCS & EPA, 2000) suggests plants should be obtained within a 50-mile radius to the wetland site. Plants obtained from seepage areas with a concentration of the type of contaminants to be removed from the wastewater will aid in the function of the wetland. Microorganisms will be present that are already adapted to the pollutant. The microorganisms found on a cattail originating from a polluted seepage area would be different from those found on a cattail growing in clean water. The microorganisms from the seepage area would then be available to aid in the breakdown, transformation, and uptake of contaminants found in the wastewater treated in the wetland.

Transplanting does not have to be complicated. Cattail rhizomes can simply be dug and spread onto the substrate. When proper conditions exist, they will take root and grow. In one trial, cattails were obtained from the edge of a pond on the property of the producer. They were placed in an old-fashioned rear beater manure spreader and simply spread on the relatively dry substrate. Conditions remained dry for twelve days after spreading. Once the substrate received water, the cattails took root and grew. This vegetation establishment cost the producer very little. Another inexpensive method is to contact local highway officials and arrange for them to deliver the material obtained when cleaning road ditches containing wetland plants. One disadvantage is that this material contains unwanted objects such as bottles, cans, and other trash (Simeral, 1998).

Table 9 *Recommended Plants and Seeds*

Wetland Rootstock List - Use hydrophytic (water tolerant) plants.

SCIENTIFIC NAME	COMMON NAME	PLANT TYPE
Carex lacustris	Common Lake Sedge	Rootstock
Iris versicolor	Northern Blue Flag	Rootstock
Pontederia cordata	Pickerel-Weed	Rootstock
Sagittaria latifolia	Common Arrowhead	Rootstock
Scirpus validus	Soft-Stem Bulrush	Rootstock
Sparganium eurycarpum	Giant Bur-Reed	Rootstock
Spartina pectinata	Prairie Cord-Grass	Rootstock

(continued on pg. 42)

Table 9 **(Continued)** *Recommended Plants and Seeds*

Transitional/Slope Seed List

SCIENTIFIC NAME	COMMON NAME	PLANT TYPE
Aster novae-angliae	New England Aster	Forb
Monarda fistulosa	Bergamont	Forb
Ratbida pinnata	Yellow Coneflower	Forb
Rudbeckia hirta	Black-Eyed Susan	Forb
Rudbeckia subtomentosa	Sweet Black Eyed Susan	Forb
Silphium terebinthinaceum	Prairie Dock	Forb
Verbena hastata	Blue Vervain	Forb
Vernonia fasiculata	Ironweed	Forb
Iris virginica	Blue Flag Iris	Forb
Eupatorium perfoliatum	Boneset	Forb
Andropogon gerardi	Big Bluestem	Grass
Panicum virgatum	Switchgrass	Grass
Sorghastrum nutans	Indian Grass	Grass
Elymus canadensis	Canada Wild Rye	Nurse crop/Grass
Carex granularis	Pale Sedge	Sedge
Carex normalis	Spreading Oval Sedge	Sedge
Carex vulpinoidea	Brown Fox Sedge	Sedge
Scirpus atrovirens	Black Bulrush	Bulrush
Scirpus cyperinus	Wool-Grass	Bulrush
Elymus virginicus	Virginia Wild Rye	Grass
Spartina pectinata	Prairie Cord-Grass	Grass
Aster lateriflorus	Goblet Aster	Forb
Aster lucidulus	Shining Aster	Forb
Helenium autumnale	Common Sneezeweed	Forb
Helianthus grosseserratus	Sawtooth Sunflower	Forb
Lobelia siphilitica	Great Blue Lobelia	Forb
Polygonum pensylvanicum	Pennsylvania Smartweed	Forb
Thalictrum dasycarpum	Purple Meadow-Rue	Forb

(continued on pg. 43)

Table 9 (Continued) *Recommended Plants and Seeds*

Upland Buffer Seed List

SCIENTIFIC NAME	COMMON NAME	PLANT TYPE
Andropogon gerardi	Big Bluestem	Grass
Elymus canadensis	Canada Wild Rye	Grass
Panicum virgatum	Switch Grass	Grass
Schizachyrium scoparium	Little Bluestem	Grass
Desmodium canadense	Canada Tick-Trefoil	Legume
Asclepias syriaca	Common Milkweed	Forb
Aster pilosus	Awl-Aster	Forb
Echinacea purpurea	Purple Coneflower	Forb
Heliopsis helianthoides	False Sunflower	Forb
Liatris pycnostachya	Prairie Blazing-Star	Forb
Monarda fistulosa	Wild Bergamot	Forb
Rudbeckia hirta	Black-Eyed Susan	Forb
Rudbeckia triloba	Three-Lobed Coneflower	Forb
Silphium integrifolium	Prairie Rosinweed	Forb
Solidago rigida	Stiff Goldenrod	Forb
Verbena simplex	White Vervain	Forb

- The recommended wet meadow species are all wetland or transitional species to be planted above the water line.
- The recommended upland prairie species are all upland or transitional species.
- Seed can be hand or mechanically broadcast.
- The soil in the seeded areas should be properly prepared for seeding.
- Seed should be lightly raked into the soil surface to ensure intimate soil contact and the seeded area should be covered with clean straw mulch, free of weed seeds, following seeding.
- If seeding occurs after September 15 and before April 15, then *Triticum aestivum* (winter wheat) should be seeded as the cover crop. If seeding occurs after April 16 and before September 14, then *Avena sativa* (oats) should be seeded as the cover crop.

Schematic of Water Budget **FIGURE 16**

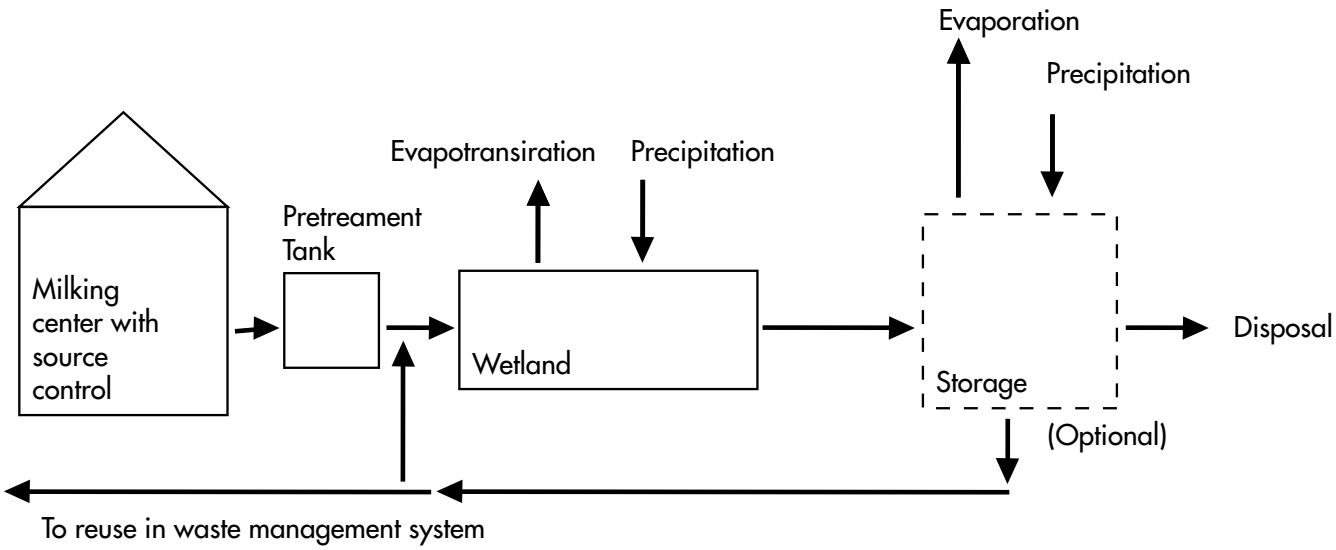

Design Example: Constructed Wetland

The 629 Standard requires the following when designing a constructed wetland:

- Pretreatment with 3-day hydraulic retention time
- Water budget for all water entering and leaving the wetland (Figure 16)
- Wetland hydraulic retention time of 8 days
- Wetland maximum hydraulic loading rate of 0.2ft/day
- Wetland maximum organic loading rate of 80 lbs BOD5/Acre-Day
- Wetland minimum flow depth of 0.33 ft

Assume the following for the design example:

Average daily wastewater discharge = 400Gal/day = 53.5 ft^3/day

BOD5 concentration is unknown - assume 3,000mg/L based on default value in the standard

Location: Dane County, WI

System Design: Pretreatment, Constructed wetland, buffer area application

Length to width ratio = 10:1

Warm weather flow depth = 6 in

Vegetation porosity = 0.75

Pretreatment tanks size: 1,200 Gal minimum
(400 Gal/day x 3 day Hydraulic Retention time)

Table 10 *Average Monthly Precipitation and Pan Evaporation Rate in Wisconsin*

Month	Average Precipitation (in/month) *	Open Water Average Evaporation (in/month)
JANUARY	1.1	0.3
FEBRUARY	0.9	0.3
MARCH	1.8	0.7
APRIL	2.7	1.5
MAY	3.8	2.3
JUNE	2.2	3.6
JULY	3.8	5.0
AUGUST	3.5	5.1
SEPTEMBER	3.7	4.0
OCTOBER	2.2	2.6
NOVEMBER	1.9	1.5
DECEMBER	1.3	0.5
TOTAL	31.1	24.7

* *USDA Natural Resources Conservation Service –Wisconsin, 2005*[b]

Design Example: Organic Loading Rate

(3000 mg BOD/L) x (g/1000 mg) x (kg/1000 g) x (3.8 L/Gal) x (2.2 lbs/kg)=0.0174 lbs BOD/Gal

(0.0174 lbs BOD/Gal) x (400Gal/day) = 6.96 lbs BOD/Day (Call it 7.0)

Solve for minimum area needed

(7 lbs BOD/day)/(80 lbs BOD/Acre-Day) = 0.0875 Acre = 3,812 sq ft

Solving for length with a 10:1 length-to-width: width ratio

(10 x W) x W = 3,812 sq ft

$W^2 = 381.2\ ft^2$

Then W = 19.5 ft (use 20 ft)

L = 10 x W = 10 x 20' = 200 ft

Area of water surface = 20' x 200' = 4,000 sq ft

Checking to Satisfy Hydraulic Retention Time (HRT) of 8 Days

$$HRT = \frac{(\text{Surface Area}) \times (\text{Depth}) \times (\text{Vegetation Porosity})}{\text{Flow Rate}}$$

$$HRT = \frac{(20\ ft \times 200\ ft) \times (0.5\ ft) \times (0.75)}{53.5\ \text{cubic feet/day}}$$

HRT = 28 days >> 8 days (OK based on wastewater only flow)

Checking Hydraulic Loading Rate which is Flow Rate Divided by Surface Area

HLR = (53.5 cubic ft/day)/(20 ft x 200 ft) = 0.013 ft/day << 0.2 ft/day (OK based on wastewater only flow)

(continued on pg. 46)

Table 11 *Total Wetland Depth*

Determining Wetland Total Depth	
Summer Flow Depth	6 inches
Ice Accumulation	6 inches
Accretion	10 inches
25yr -24 hr precipitation	4.5 inches
Safety	12 inches
TOTAL DEPTH	38.5 inches

Using a side slope of 3:1 the cell top width becomes:

17 ft + 2 (38.5 in/12 in/ft) x (3/1) =
17 ft + 19 ft = 36 ft and the top length becomes:
197 ft + 19 ft = 216 ft

Therefore the top area is
7,776 ft^2 = (36' x 216') for a single cell wetland.

The gross precipitation assuming 100% run-in for the 7,776 ft^2 open surface area is listed in Table 12. The evapotranspiration for the 4,000 ft^2 water surface area assumed at the rate of 0.8 X open water evaporation rate is listed in Table 12.

Table 12 *Gross precipitation falling into a 7,776 ft^2 wetland surface, evapotranspiration from a 4,000 ft^2 wetland surface with milking center discharge of 1,604 ft^3 /mo.*

Month	Gross precipitation (ft^3/mo)	Evapotranspiration (ft^3/mo)	Precipitation + Milking Center Discharge – Evapotranspiration (ft^3/mo)
JANUARY	713	80	2,237
FEBRUARY	583	80	2,107
MARCH	1,166	187	2,584
APRIL	1,750	400	2,953
MAY	2,462	613	3,453
JUNE	2,851	960	3,495
JULY	2,462	1,333	2,733
AUGUST	2,268	1,360	2,512
SEPTEMBER	2,398	1,067	2,935
OCTOBER	1,426	693	2,336
NOVEMBER	1,231	400	2,435
DECEMBER	842	133	2313
TOTAL	20,180	7,307	32,097

NOTE: Annual volume from milking center is 19,248 cu ft. On average, the system downstream of the wetland would have to handle 32,097 cu ft of wastewater each year.

Subsurface Absorption Systems

The 629 Standard allows for two types of subsurface absorption systems. These are soil-covered systems (similar to conventional septic systems), and organic matter covered systems. In both of these systems, the wastewater is pretreated through a two-chambered tank (Figure 12b), and then disposed underground through perforated pipes in engineered treatment beds. The advantage of these systems over surface disposal systems is they are unaffected by low temperatures. However, they are more costly to construct and are more susceptible to plugging if not properly operated and maintained.

Because subsurface systems rely on the soil for final treatment, it is vital that a Certified Soil Tester (CST) licensed through the Wisconsin Department of Commerce conduct a thorough soil evaluation. The standard provides details on how the soil evaluation is to be conducted. In making their determination, a CST refers to table 83.44-2 in Comm. 83, similar to Table 13.

Wastewater can be transferred to the subsurface system by gravity, or by pumping if there is insufficient drop or required by the CST. Pretreatment in a two-chambered settling/floatation tank with a minimum of 6 days retention is critical to the long-term operation of the subsurface system. Experience has shown that without pretreatment, the milk fats and manure solids found in milking center wastes will plug the subsurface system in short order, requiring costly repair or replacement. Using source control techniques within the milking center and providing the pretreatment called for in the 629 standard should avoid this problem. Even with the pretreatment tank in place, however, it is still important that waste milk not be dumped into the system. Doing so will overload the pretreatment tank and result in plugging of the subsurface system. Periodic pumping of the pretreatment tank, as called for in the standard, is also vital to the long-term performance of the system.

Table 13 *Maximum Soil Application Rate Based On Morphological Soil Evaluations**

SOIL TEXTURE	SOIL STRUCTURE		Max. Application rate gal /sq ft / day	
	SHAPE	GRADE		
Coarse Sand, Sand, Loamy Coarse Sand, Loamy Sand		Structureless	0.7[a]	0.5[b,c]
Fine Sand, Loamy Fine Sand		Structureless	0.5	
Very Fine Sand,Loamy Very Fine Sand		Structureless	0.4	
Coarse Sandy Loam,Sandy Loam		Structureless, Massive		
	Platy	Weak	0.4	
		Moderate, Strong	0.0	
	Prismatic, Blocky, Granular	Weak	0.4	
		Moderate, Strong	0.6	
Fine Sandy Loam,Very Fine Sandy Loam		Structureless, Massive	0.2	
	Platy	Moderate, Strong	0.0	
	Platy, Prismatic, Blocky, Granular	Weak	0.2	
	Prismatic, Blocky, Granular	Moderate, Strong	0.4	

(continued on pg. 48)

Table 13 (Continued) *Maximum Soil Application Rate Based On Morphological Soil Evaluations**

SOIL TEXTURE	SOIL STRUCTURE		Max. Application rate gal /sq ft / day
	SHAPE	GRADE	
Loam		Structureless, Massive	0.2
	Platy	Moderate, Strong	0.0
	Platy, Prismatic, Blocky, Granular	Weak	0.4
	Prismatic, Blocky, Granular	Moderate, Strong	0.6
Silt Loam		Structureless, Massive	0.0
	Platy	Moderate, Strong	0.0
	Platy, Prismatic, Blocky, Granular	Weak	0.4[c]
	Prismatic, Blocky, Granular	Moderate, Strong	0.6
Silt			0.0
Sandy Clay Loam, Clay,Silty Clay Loam		Structureless, Massive	0.0
	Platy	Weak, Moderate, Strong	0.0
	Prismatic, Blocky, Granular	Weak	0.2
		Moderate, Strong	0.4
Sandy Clay, Clay, Silty Clay		Structureless, Massive	0.0
	Platy	Weak, Moderate, Strong	0.0
	Prismatic, Blocky, Granular	Weak	0.0
		Moderate, Strong	0.2

**Taken from Table 83.44-2, Wis. Dept. of Commerce, 2004*

[a]**With < 60% rock fragments**
[b]**With > 60% to 90% rock fragments**
[c]**Requires pressure distribution**

Using the on-site soil characteristics, the CST will assign an allowable wastewater application rate. Although an engineer or technician cannot make this determination (assuming they are not a licensed CST) they can determine the general suitability of a given site for subsurface treatment during the early design stages. By using the basic soil characteristics of the site (Table 13), a designer can advise a producer regarding the practicality, land requirement, and estimated cost of a subsurface system. This could potentially save the producer the expense of hiring a CST to evaluate a site that has little potential for supporting a subsurface absorption system. If the initial analysis by the designer looks favorable, however, and the producer wishes to proceed, they should hire a CST to conduct a thorough soils investigation. Using the waste application rate assigned by the CST, the designer can then accurately size the system, draw up a final design, and provide the producer with a solid cost estimate.

With subsurface disposal systems, there is a risk of groundwater contamination. Such systems should not be considered on sites with high groundwater, or shallow soils over fractured bedrock. Excessively well-drained or poorly drained soils should be avoided as well. Soils with application rates between 0.2 gal/sq ft/day and 0.7-gal/sq ft/day are good candidates for subsurface systems with appropriate

treatment trench or drain field sizing (Table 13). The design criteria within the standard require that the minimum size of the subsurface absorption system to be 1.5 times the wastewater production rate, divided by the soil application rate at the infiltrative surface, as determined by the CST.

Soil Covered System - In the soil-covered system, drain fields and treatment trenches allow for adsorption (chemical exchange) of dissolved solids and ions onto clay particles. In properly constructed and managed subsurface systems, organic matter also decomposes. Clear washed stone is required around the drain pipes to maintain hydraulic loading capacity (Figure 17).

FIGURE 17 **Subsurface Absorbtion Trench System (Soil Covered)**

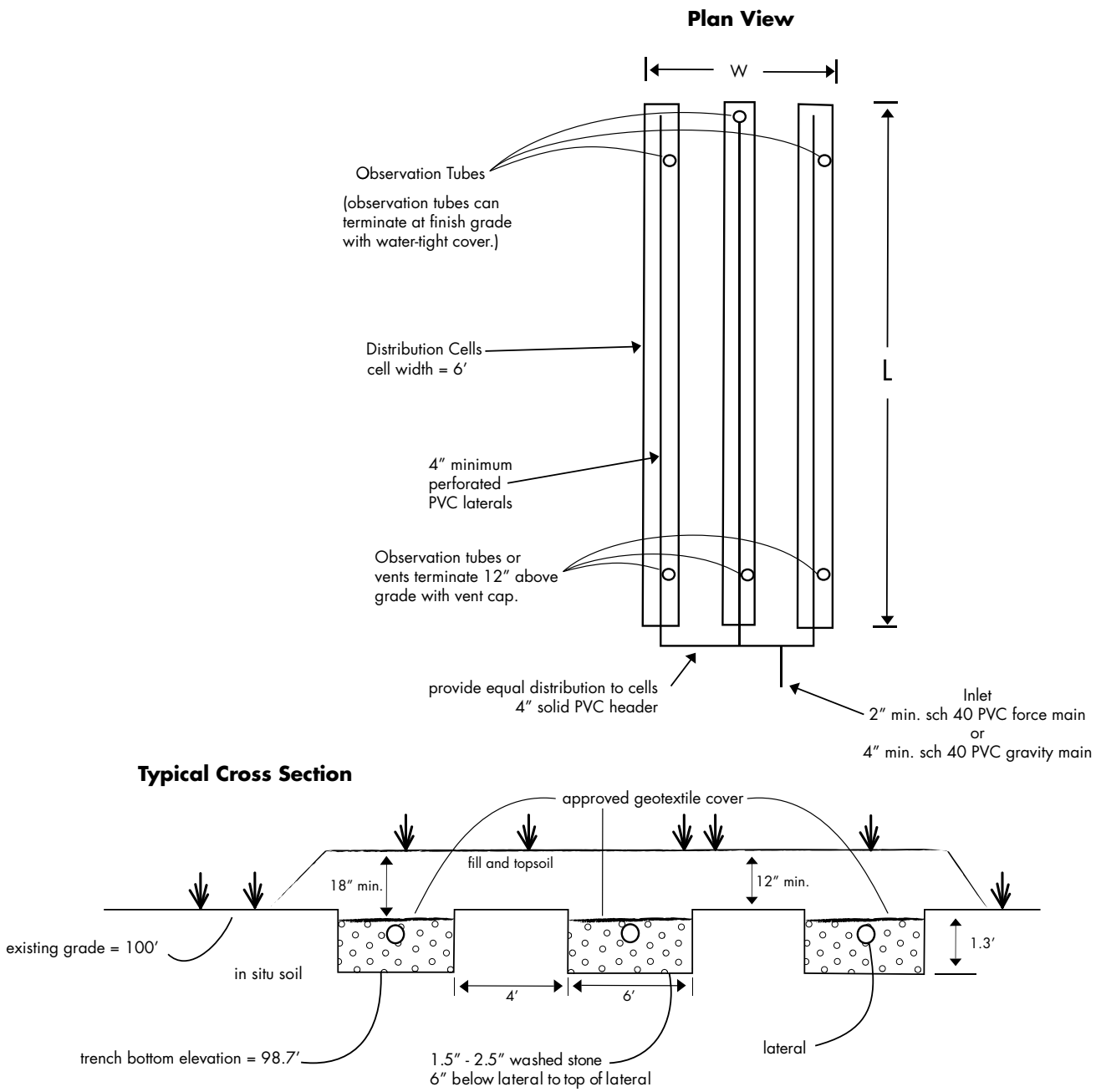

Organic Matter Covered System - In the organic matter covered system, construction is similar to the soil covered system, however the distribution pipes are bedded on washed stone and covered with bark or wood chips rather than soil (Figure 18). The organic matter serves as media for aerobic bacteria to grow on, as well as providing a carbon source for those bacteria. Organic matter covered systems may function better than soil covered systems in areas with heavier soils. Operation and maintenance of organic covered systems is the same as for soil-covered systems, except bark or wood chips must be periodically added as the organic matter cover breaks down and settles.

Maintenance - The subsurface system generally requires very little regular maintenance. It consists primarily of having the pre-treatment tank pumped annually. Other measures that can add to the life of the sytstem are to reduce wastewater volume and chemical cleaner use through source control and avoiding the dumping of waste milk into a system. Organic matter covered systems also require periodic addition of bark or wood chips as needed.

FIGURE 18 **Organic Matter Substrate Absorption System**

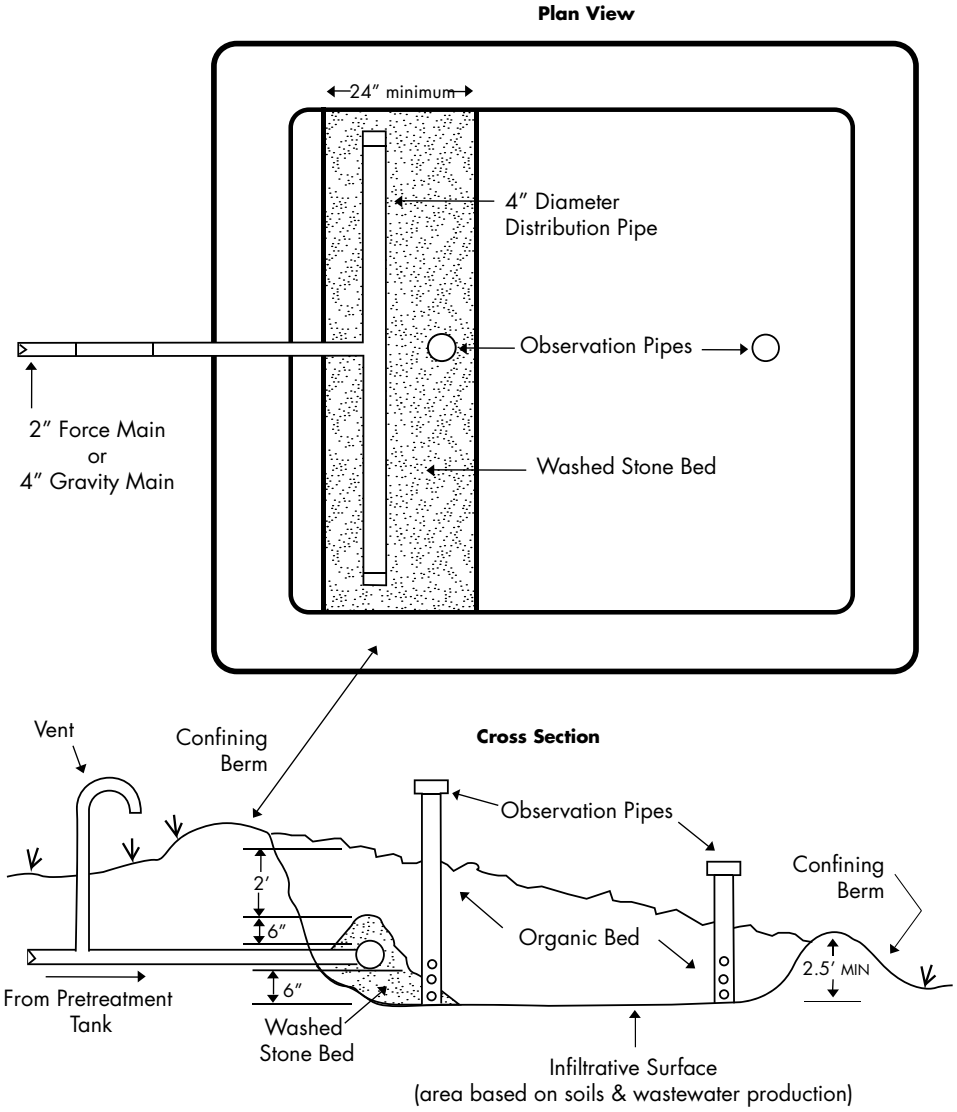

Subsurface absorption systems are notorious for failing when milk and manure solids plug the soil pores (Zall, 1972). Other causes of failure include excessive wastewater volume, infrequent pretreatment tank clean out, the toxic effect of sanitizers on essential bacteria and smearing of infiltrative surfaces during construction. Failures have been known to occur within weeks of installation.

There are several strategies that might help restart a failed subsurface absorption system. Diverting pipeline waste milk to livestock feed or manure storage has worked with some systems (Anderson, 1992). Other recommendations include reducing wastewater volume and chemical cleaners, regular pre-treatment tank maintenance and better floor waste management. Maintaining drain field aeration through periodic dosing and construction of air inlets may also improve system performance. Other than for mowing, all equipment traffic over subsurface systems should be avoided.

Design Example: Subsurface Absorption System

Design a subsurface absorption system to dispose of milking center wastewater volume of 400 gallons per day.

Soils in the treatment area are a clay loam with moderate soil structure.

Certified Soil Tester (CST) determines the maximum soil application rate is 0.4 gals/sq ft/day.

Solution:

Determining drainfield area: (400 gal/day / 0.4 gal/ft^2/day) x 1.5 safety factor = 1,500 ft^2 of drainfield area

A three-trench drain field with 6 ft. wide trenches requires a length of:
83.3 ft (1,500 ft^2 / (6 ft.^{2} / ft / line x 3 lines))

Sizing Pretreatment Tank:

The pretreatment tank must have a minimum of 6 days of retention.

400 gal/day x 6 days = 2,400 gallon minimum size. Use a 2,500-gallon tank (next larger commercially available size).

Buffer Process

Intensively applying pretreated milking center wastewater to sloping grass buffer areas can be an effective way to treat wastewater for small to medium pipeline milking systems and small parlors with wastewater generation less than 500 gallons/day. (Sherman, 1981; Barker and Young, 1985; Schwer and Clausen, 1989).

With the buffer process the wastewater flows through a pretreatment tank, as described above, before being delivered to the buffer area. Spreading wastewater out on a well-vegetated surface is an excellent treatment method. A distribution pipe at the entrance of the buffer is necessary to provide an even flow across the surface. Dosing with a siphon system or a pump allows resting of the buffer sod. Figures 19, 20 and 21 show a plan view of a buffer system.

Most biological activity occurs in the topsoil layer. The buffer relies on this activity to degrade the wastewater. Oxygen, sunlight, and microorganisms are all necessary inputs to the aerobic treatment process. The wastewater has a chance to infiltrate slowly over a wide area and also to be filtered as it flows through the sod. The bacterial activity in the buffer is aerobic, therefore the treatment process will be nearly odor-free. In addition to bacterial action, soil absorption of nutrients, evaporation, and physical filtration occur. Because both infiltration and surface flow are taking place,

a short circuit through the grass filter, could result in pollution of either downstream surface water or groundwater. Thus, ongoing maintenance of the buffer is critical to protect water quality.

Any rills must be filled and seeded promptly, and vegetation must be periodically harvested to remove trapped nitrogen and phosphorus. Harvested vegetation can be fed to livestock, used as bedding or field applied.

Buffer areas need to be well vegetated before they are stressed by the addition of wastewater. Adding wastewater too soon to a newly established stand will prevent the grasses from forming the dense sod needed for treatment of the waste. Often it is better to look for existing vegetation that can be used than to prepare a buffer area by land forming and seeding. The vegetation should be dense sod-forming grass. A mix of seeds is better, as there will likely be moisture and nutrient differences down the length of the buffer and a combination of grasses can perform better under variable conditions. To protect water resources, the down gradient edge of a buffer area should be a least 50 feet from private water wells, channelized flow, surface water and karst features.

The buffer area should be gently sloped (2% to 15%) to encourage slow wastewater movement, and should be across its width to prevent channeling. Wide strips (greater than 12 ft) are recommended to provide greater hydraulic loading capacity and less stress on the vegetation (Ramsden, 1993). Long, narrow strips may be used in areas with steep slopes. Serpentine or switchback strips can provide a greater length of flow in confined areas.

A soil's ability to infiltrate wastewater is affected by hydraulic loading rate, wastewater characteristics, permeability and management (Yang et al., 1980). Hydraulic loading must be managed to maintain soil aeration. Buffer areas must be rested at least three days per week (USDA-NRCS, 1984). This can be accomplished by constructing two buffer areas and using them alternately or by dosing a single strip periodically with a pump chamber (Figure 19c) or siphon tank (Figure 19b). Source control practices and devices that reduce wastewater volume and limit milk and solids content are recommended to prolong buffer life and expedite treatment.

Buffer Process Cross Section **FIGURE 19a**

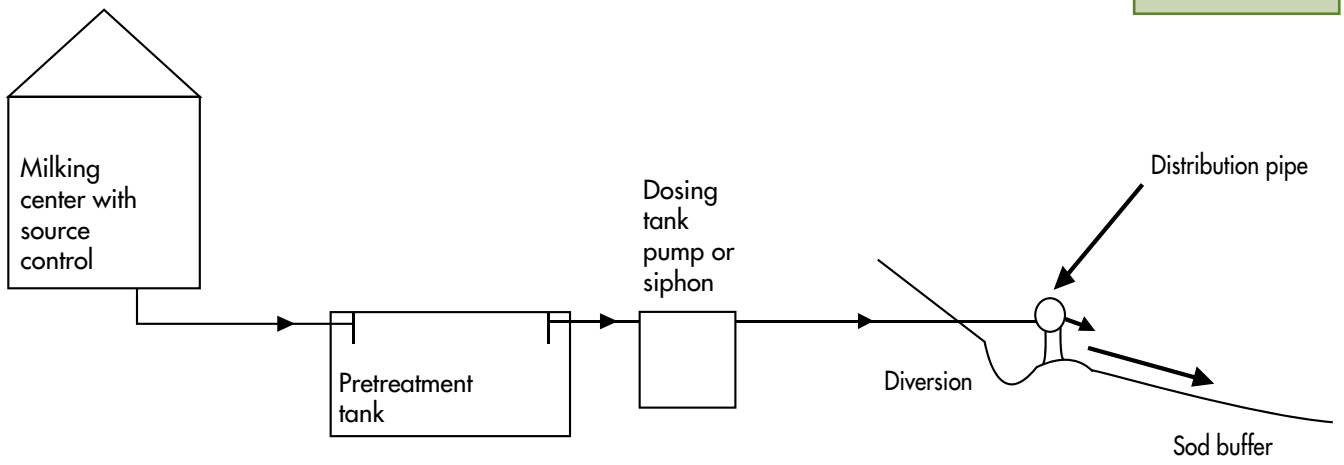

FIGURE 19b (in detail)

Dosing Siphon Cross Section

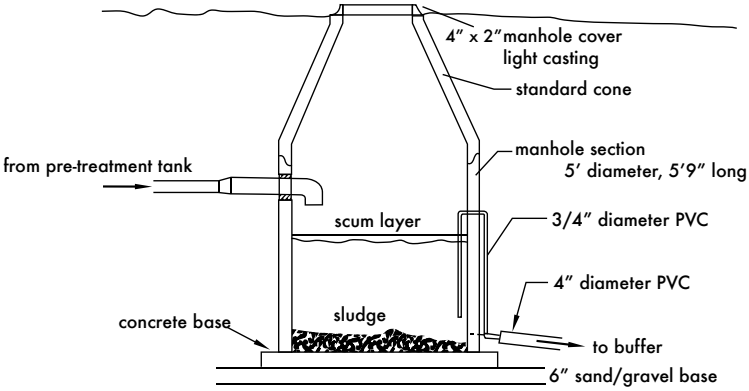

FIGURE 19c (in detail)

Double Chamber Pre-treatment Tank and Dosing Pump Cross Section

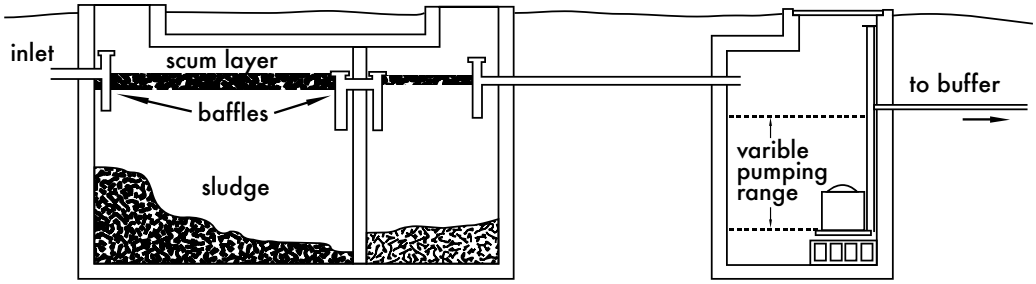

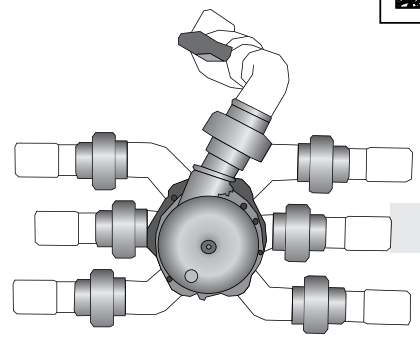

Flout® Dosing Distribution Device

Automated Distributing Valve

FIGURE 19d

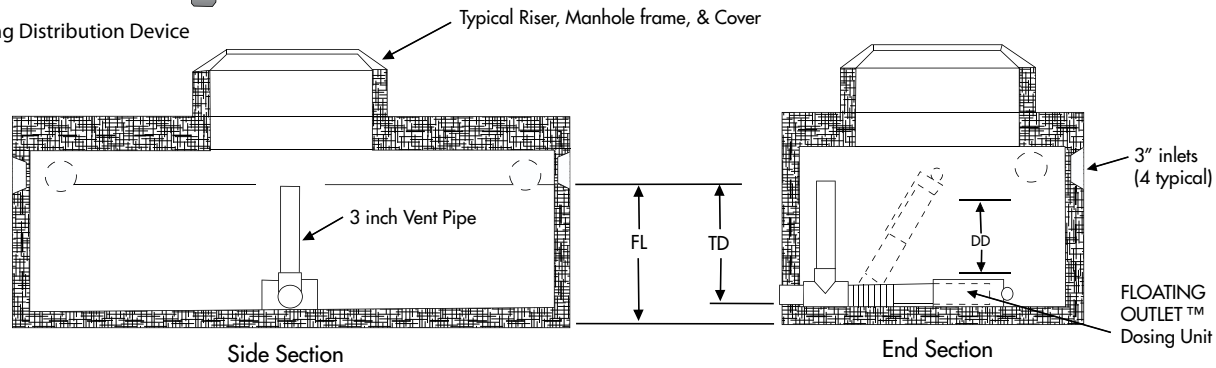

FIGURE 20

Profile of Buffer Area Distribution Pipe that Allows Resting by Delayed Pumping or Dosing

(From Wright & Graves, 1998)

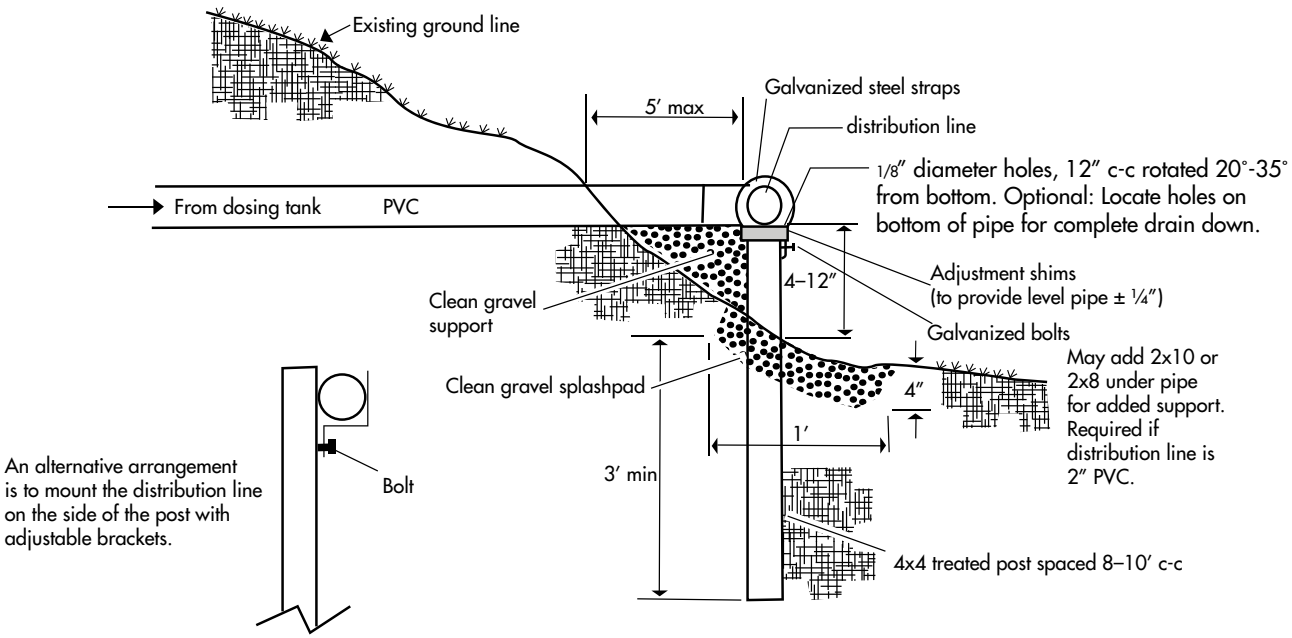

FIGURE 21

Plan View of Distribution Pipe & Buffer Area that Allows Resting by Delayed Pumping or Dosing

(From Wright & Graves, 1998)

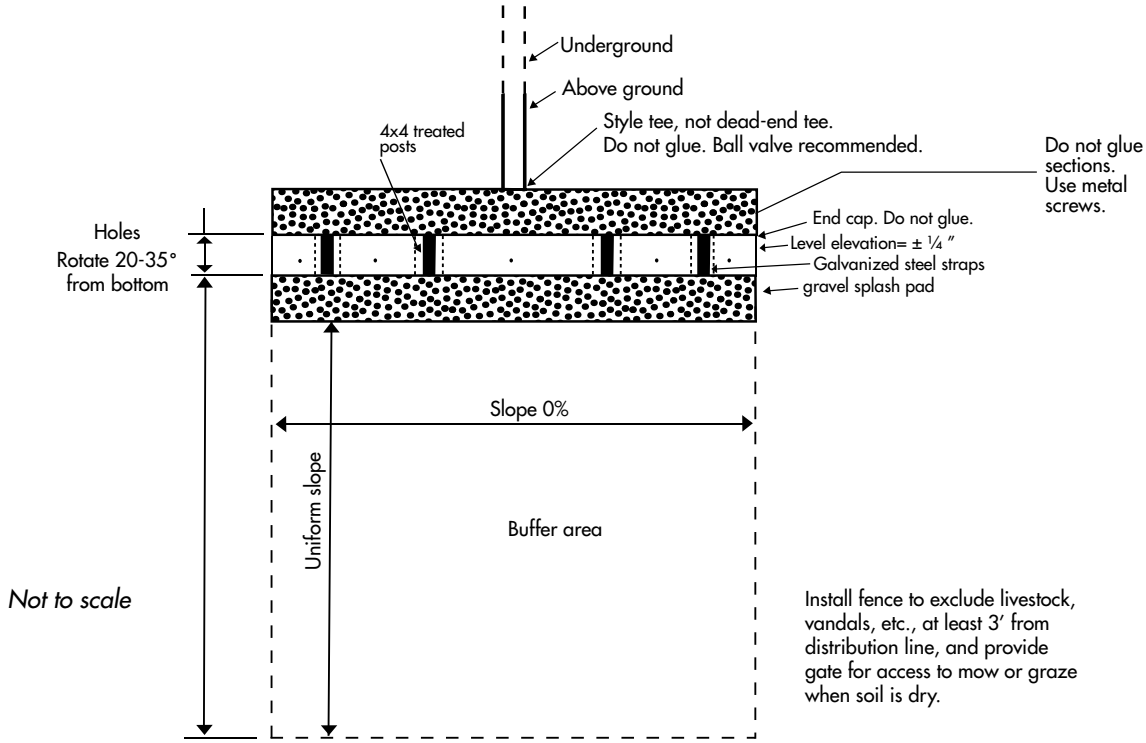

Design Example: Buffer Process

Assume: 400 Gallons per day flow rate

Pretreatment tank = 1,200 Gal (400 Gal/Day x 3 Days)

Dosing frequency = 3 days

Dosing tank = = 1,200 Gal (400 Gal/Day x 3 Days)

Somewhat poorly drained soil with a depth of 30 inches

Soil slope = 6%

Minimum dosing area: 1,200 Gal/0.075 Gal/ft^2 = 16,000 ft^2

Checking maximum loading rate: 400 Gal/day x 7 Days/wk = 2,800 Gal/wk
((2,800 Gal/wk) /(7.48 Gal/ft^3)) x ((12 in/ft) / (0.9 in/wk)) = 4,991 ft^2 < 16,000 ft^2
Checking minimum area based on 20-minute minimum flow through time.

Solve Mannings formula for maximum flow rate

$Q = (1.486 \times S^{0.5}) \times (A^{1.667}/(n \times P^{0.667}))$

Q = channel capacity (ft^3/sec)

S = slope (ft/ft)

A = water cross sectional area (ft^2)

P = wetted perimeter (ft)

n = Manning coefficient of friction

Assume: Minimum flow depth = 0.1 in

Wetted perimeter = width of channel = 100 ft

S = 0.06

A = 100 ft x 0.1 in/12 in/ft = 0.83 ft^2

n = 0.3

$Q = 1.486 \times (0.06)^{0.5} \times (0.83)^{1.667} / (0.3 \times 100^{0.667})$

$Q = 1.486 \times 0.24 \times 0.73 / (0.3 \times 21.6)$

Q = 0.04 ft^3/sec = 17.9 Gal/min

Based on the minimum dosing area, the minimum buffer area is 16,000 ft^2. If the width is selected at 100 ft, the minimum buffer length becomes 160 ft (16,000 ft^2/100 ft). Therefore use a buffer of 100 ft x 160 ft.

Appendix A - Worksheets

Worksheet 1: Milking Center Wastewater Management Assessment Check List

Owner/Operator:_____Technician:_____

Date:_____

Currently Present	Discussed with Owner / Operator	ITEM	NOTES
		Manure tracking to milkhouse/parlor not washed to wastewater drain.	
		Boot washing in milkhouse/parlor not washed to wastewater drain.	
		Holding area floor not washed to milkhouse/ parlor wastewater drain.	
		Parlor floor not washed to milkhouse /parlor wastewater drain.	
		Manure scraped from holding area before washing floor to milkhouse /parlor wastewater drain. Standard 629 excludes manure from treatment system.	
		Holding area manure scraped regularly to keep cattle from tracking manure into parlor if parlor floors washed to milkhouse/parlor wastewater drains. Standard 629 excludes manure from treatment system.	
		Other manure source delivered to milkhouse/ parlor wastewater drain. 629 Standard excludes manure from treatment system.	
		Colostrum milk not disposed down milkhouse/parlor wastewater drain.	
		Antibiotic milk not disposed down milkhouse/ parlor wastewater drain.	
		Milk remaining in transfer line blown to bulk tank with compressed air.	
		Diverter valve installed at end of wash line. Excess milk collected and not disposed in milkhouse/parlor wastewater drain.	
		Capture milk line pre rinse so milky water is not disposed in milkhouse/parlor wastewater drain.	
		Floor drain in front of bulk tank discharges in parlor to provide an early warning that bulk tank valve has been inadvertently left open during milking or other warning system in installed.	
		Bulk tank overflow warning system is installed.	

Currently Present	Discussed with Owner / Operator	ITEM	NOTES
		An emergency plan is in place for disposing of a bulk tank load of milk that cannot be sold. Plan does not include dumping down the milkhouse/parlor wastewater drain.	
		Excess milk remaining in receiver pump/transfer line is captured before first rinse and not disposed in milkhouse/parlor wastewater drain.	
		Excess milk from bulk tank drain down is captured before first rinse and not disposed in milkhouse/parlor wastewater drain.	
		Waste milk replacer used for calf feeding is not disposed in milkhouse/parlor wastewater drain.	
		Well water milk precooler is not discharged in milkhouse/parlor wastewater drain.	
		Pipeline wash/sanitize water reused for other cleaning practice is not disposed in milkhouse/parlor wastewater drain directly.	
		Manifold is used for washing milking units instead of round bottom wash sink.	
		Fill volume in milking system wash sink is as specified by equipment dealer.	
		Air injection washing of milking system is used and air injector performance is checked as recommended by equipment dealer.	
		Automated CIP wash/sanitize system is used and operation is checked periodically. Rinse volume is reduced when pre-rinse is used to divert milky rinse water.	
		Acid rinse and sanitizing cycles are combined into one.	
		Bulk tank is manually rinsed instead of rinsed automatically.	
		Cows are prepared for milking using a moist towel instead of sprayed with a hose.	
		Hoses are fitted with spring-loaded nozzles.	
		Water leaks in piping and valves are inspected and repaired on a weekly basis.	
		Booster pump is used on hoses used to wash floors.	
		Floor slopes and drain locations allow for rapid floor washing.	
		Water softener is used when "hard" water is present.	

(Worksheet 1 continued)

Currently Present	Discussed with Owner / Operator	ITEM	NOTES
		Water softener recharge water is reused for another purpose (floor wash down, etc.)	
		Iron filters are installed where high iron contents exist in system wash water.	
		Bulk tank heat recovery emergency blow off water is not disposed in milkhouse/parlor wastewater drain.	
		Low/no phosphorous detergents and acids are used as milking system wash chemicals.	
		Milking system-washing chemicals are stored so any spills will not enter the milkhouse/parlor wastewater drain.	
		Milkhouse/parlor drain discharges to a manure storage that meets design/construction standards.	
		Milkhouse/parlor drain discharges to a pretreatment tank and subsurface disposal field that does not interconnect with field tiles, overflow to the soil surface or discharge to a road ditch or area of concentrated flow, discharge close to ground water or discharge directly into surface water.	
		Milking animals are excluded from milking center wastewater that is discharged at the ground surface.	
		The owner/operator plans to make changes to the milking system or number of animals milked which could contribute to an increase in water use, milk contamination, chemical contamination, or manure contamination of wastewater.	

Worksheet 2: Site Assessment (from Waste Storage Facility Standard)
Milking Center Wastewater Treatment System Site Assessment Check List

Owner/Operator:_____Technician:_____

Date:_____

Sketch the site and add photos or maps as needed (use space provided on opposite page)

Locations of:

- Buildings
- Roads and lanes
- Utilities
- Property lines, setbacks
- Soil test pits
- Easements
- Wells
- Surface water features
- Wetlands
- Karst features
- Surface drains, drain tile
- Cultural resources
- Floodplain

Assessment of the area used for final disposal of the milking center wastewater:

Existing waste storage capacity

Document soil test pits:

- Location
- Depth to bedrock
- Soil texture
- Thickness of soil layers
- Depth to saturation

Milking center wastewater characteristics and volume-on-farm measurements or estimates from the Milking Center Waste Volume spreadsheet:

- Existing pretreatment of milk house waste
- Existing source control
- Types of treatment systems being considered
- Identification of potentially impacted resources

(space provided for sketch of site)

Worksheet 3: Operation and Maintenance Documentation Worksheets
Example Documentation for Maintenance of Pretreatment Tanks

Farm/Owner Name:_____Developed By:_____

Date:_____

Task	Minimum Recommended Frequency	Date Performed	Initials
Inspect for fat and solids accumulation thickness.	6 months		
Inspect security of access cover.	6 months		
Pump contents of tank and spread on fields or deliver to manure storage.	12 months as needed		
Inspect vents removing any solids/frost once in winter accumulation.	6 months or at least once in winter		
Inspect for tank cracks.	24 months at emptying		

Worksheet 4: Operation and Maintenance Documentation Worksheets
Example Documentation for Maintenance of Frequent Haul System

Farm/Owner Name:_____Developed By:_____

Date:_____

Task	Minimum Recommended Frequency	Date Performed	Initials
Inspect spreadin equipment for leaks.	6 months		
Inspect for fat or settled solids accumulation.	6 months		
Remove accumulates solids.	At least annually		
Test high water alarm.	6 months		
Inspect vents and remove any solids/frost winter accumulation.	6 months or at least once in winter		
Inspect security of access cover.	6 months		
Inspect wiring for insulation failures and corrosion of connections.	12 months		
Inspect spreading equipment for mechanical soundness (safety chains, tire condition, corrosion, etc.)	12 months		
Inspect tank for cracks	24 months		

Worksheet 5: Operation and Maintenance Documentation Worksheets
Example Documentation of Maintenance of Ridge and Furrow

Farm/Owner Name:_____Developed By:_____

Date:_____

Task	Minimum Recommended Frequency	Date Performed	Initials
Mow and remove vegetation from the ridges leaving some vegetation at end of growing season.	Twice during growing season		
Inspect for bank slumping or burrowing rodents and exclude as needed.	6 months		
Observe that load/rest cycle is as designed.	1 month		
Inspect furrow bottoms removing accumulated solids.	12 months		
Observe infiltration process and make plans to remedy inconsistencies.	1 month		
Test water supply well(s) water for nitrates and E. Coli.	12 months		

Worksheet 6: Operation and Maintenance Documentation Worksheets
Example Documentation for Maintenance of Constructed Wetland

Farm/Owner Name:_____Developed By:_____

Date:_____

Task	Minimum Recommended Frequency	Date Performed	Initials
Inspect wastewater distribution system for uniformity and/or plugging. Make needed repairs.	1 month		
Inspect plant populations for proper density (>80%). Replant or remedy problems as needed.	12 months		
Inspect banks for slumping soil or rodent burrowing. Exclude rodents as needed.	6 months		
Adjust the outlet to maintain design flow depth in warm season and design flow depth in cold season. Inspect for uniformity of discharge.	6 months		
Inspect auxiliary over flow device for integrity.	6 months		
Inspect and remove undesirable vegetation.	3 months in growing season		
Mow embankments.	12 months		
Observe for uniformity of flow path through the wetland. Remedy short circuits.	12 months		

Worksheet 7: Operation and Maintenance Documentation Worksheets
Example Documentation for Maintenance of Pump/Dosing Tank

Farm/Owner Name:_____Developed By:_____

Date:_____

Task	Minimum Recommended Frequency	Date Performed	Initials
Inspect pump/dosing tank for accumulation of solids and remove excess as needed.	6 months		
Inspect security of access cover of pump/dosing tank.	6 months		
Inspect vents removing any solids/frost accumulation.	6 months or at least once in winter		
Test high water alarm.	6 months		
Inspect wiring for insulation failures and corrosion of connections (if used).	12 months		
Inspect pump/dosing tank for cracks.	24 months		

Worksheet 8: Operation and Maintenance Documentation Worksheets
Example Documentation for Maintenance of Subsurface Absorption System

Farm/Owner Name:_____Developed By:_____

Date:_____

Task	Minimum Recommended Frequency	Date Performed	Initials
Look into the observation pipes at upstream and downstream ends of the absorption system. Record time of day and liquid level in the bed. Time: Liquid level:	6 months		
Inspect organic matter cover (if used) and replace as needed.	6 months		
Inspect for liquid discharge to the surface of the ground.	6 months		
Inspect for evidence of animal or vehicle traffic over the surface of the disposal area. Remedy as needed.	6 months		
Remove woody plants from the area of the absorption field.	12 months		

Worksheet 9: Operation and Maintenance Documentation Worksheets

Example Documentation for Maintenance of Buffer

Farm/Owner Name:_____Developed By:_____

Date:_____

Task	Minimum Recommended Frequency	Date Performed	Initials
Inspect flow distribution system for uniformity. Remedy non-uniformity as needed.	1 month and after storms		
Inspect flow pattern across sod and remedy short circuits/ channelized flow as needed	1 month		
Inspect flow distribution system for cracks or breaks	12 months in fall		
Harvest vegetation from buffer area. Leave an accumulation of vegetation prior to cold season. Remove vegetation only when soil is dry enough that rutting and/or compaction will not occur.	2 months in growing season		

Appendix B - REFERENCES

ASAE Power and Machinery Division Standards Committee. 2005. Safety Signs ASAE S441.3. ASABE Standards. 2006. American Society of Agricultural and Biological Engineers, St. Joseph, MI.

ASAE Swine Housing Comminttee, 2005. ASAE EP470 Manure Storage Safety. ASABE Standards. 2006. American Society of Agricultural and Biological Engineers, St. Joseph, MI.

Anderson, M. 1992. Development of Reliable Treatment Systems for Milkhouse Wash Water. M.S. thesis, University of Guelph, Ontario.

Atherton, H. 1971. Composition of milk. In *A Summary of Information Presented at New England Extension Conference on Dairy Manure and Milking Center Waste Management*. New England Center for Continuing Education, Durham, New Hampshire, 7-8 April.

Barker, J.C. and B.A. Young. 1985. Vegetative filter treatment of dairy wastewater and lot runoff in southern Appalachia. *Agricultural Waste Utilization and Management – Proceedings of Fifth International Symposium of Agricultural Wastes,* pp. 745-758, Chicago, Illinois. American Society of Agricultural Engineers. St. Joseph, Michigan.

Crowley, J., N. Jorgensen, W.T. Howard, P. Hoffman and R. Shaver. 1991. *Raising Dairy Replacements*. North Central Regional Extension Publication No. 205. University of Wisconsin-Extension, Madison, Wisconsin.

Eberhart, R.J., et al. 1987. Current concepts of bovine mastitis. National Mastitis Council, Arlington, Virginia.

Environmental Protection Agency. 1980. *Design Manual: On Site Wastewater Treatment and Disposal*. EPA 625/1-80-012 EPA Office of Research and Development, Cincinnati, Ohio.

Finlayson, C. 1995. Accomplishments of the Water Quality Demonstration Project - East River - Milking Center Wastewater. University of Wisconsin-Extension.

Graves, R.E. 1972. Milking center liquid wastes. In *Manure and Animal Waste Management Notebook*. University of Wisconsin-Extension, Madison, WI.

Graves, R.E. 1995, Drainage Systems for the Milking Center. *Designing a modern milking center-parlors, milking systems, management and economics: proceedings from the designing a modern milking center national conference*, Rochester, NY, November 29-December 1, 1995, NRAES-73, Northeast Regional Agricultural Engineering Service, Ithaca, NY. pp. 266-267.

Hayman, D. 1988. Subsurface drainage contamination with milkhouse wastewater: an environmental concern. Upper Thames River Conservation Authority, London, Ontario.

Hoffman P. C. and R. Plourd. 2003. *Raising Dairy Replacements*. MidWest Plan Service. Ames, IA

Joseph, E. 1992. Personal communication. Dairy Equipment Company. Madison, WI.

Jorgensen, M., and P.C. Hoffman. 2006. A Field Survey of On-farm Milk Pasteurization Efficacy. Professional Animal Science 22:473-476.

Lanier, A.L., D. Fox and D.W. Smith. 1991. Wetland for treating liquid dairy waste: design and monitoring. ASAE Paper No. 91-4020. St. Joseph, Michigan: ASAE

Light, R.G. 1972. Drainage systems in milking centers. ASAE Paper No. 72-414. St. Joseph, Michigan: ASAE.

Lindley, J.A. 1979. Anaerobic-aerobic treatment of milking center waste. *Transactions of the ASAE 22* (2): 404-408.

Loehr, R.C. 1974. *Agricultural Waste Management Problems, Processes and Approaches*. New York: Academic Press.

Louden, T.L., D.D. Jones, J.B. Petersen, L.F. Backer, M.F. Brugger, J.C. Converse, C.D. Fulhage, J.A. Lindley, S.W. Melvin, H.L. Person, D.D. Schulte and R.K. White. 1985. *Livestock Waste Facilities Handbook, 2nd Ed.* MWPS-18. Midwest Plan Service, Ames, Iowa.

Miller, M.H., D.G. Grieve, P.H. Groenevelt, D.A. Lobb and R.P. Voroney. 1987. An assessment of milkhouse wash water treatment and disposal systems. Center for Soil and Water Conservation, University of Guelph, Ontario.

Mitsch, W.J. *Self-design and Wetland Creation: Early Results of a Freshwater Marsh Experiment*., Olentangy River Wetland Research Park at The Ohio State University Annual Report, 1996. Columbus: The Ohio State University. May 1997.

Ramsden, J., 1993. Personal communication. Assistant State Conservation Engineer, United States Department of Agriculture Natural Resources and Conservation Service (*f/k/a* Soil Conservation Service), Madison, WI.

Reinemann, D.J., G.A. Mein, D.R. Bray, D. Reid, J.S. Britt, 2003, *Troubleshooting Cleaning Problems in Milking Systems*, National Mastitis Council, Madison, WI.

Reinemann, D.J., H.K. Bolton and B.J. Holmes. 1992. *Flat-barn Milking Systems*. Extension bulletin A3567. University of Wisconsin-Madison, Wisconsin.

Schwer, C.B. and J.C. Clausen. 1989. Vegetative filter treatment of dairy milkhouse wastewater. J. Environmental Quality. 18(4): 446-451.

Sherman, D.F. 1981. Selection of Treatment Alternatives for Milkhouse and Milking Center Wastewater. M.S. thesis. Cornell University, Ithaca, New York. 166 pp.

Simeral, Kenneth D., 1998, *Using Constructed Wetlands for Removing Contaminants from Livestock Wastewater A-5-98*, School of Natural Resources, The Ohio State University Fact Sheet, Columbus, Ohio. Smith, T. (1992). Personal communication. Associate Professor, Dairy Science Department, University of Wisconsin-Madison, Wisconsin.

Smith, T. 1992. Personal communication. Associatre professor, Dairy Science Department, University of Wisconsin-Madison, Wisconsin.

Springman, R.E., D.C. Payer, and B.J. Holmes. (1994), *Pollution Control Guide for Milking Center Wastewater Management*. (A3592).

USDA Natural Resources Conservation Service and Environmental Protection Agency. 2000. *Handbook of Constructed Wetlands*, Volume 1, EPA number 843B00005.

USDA Natural Resources Conservation Service. 1996. *Agricultural Waste Management Field Handbook, National Waste Management Handbook Part 651*. USDA.

USDA Natural Resources Conservation Service, Wisconsin. 2008[a]. Wastewater Treatment System (Code 629) Field Office Techincal Guide.

USDA Natural Resources Conservation Service, Wisconsin (*f/k/a* Soil Conservation Service). 1984. Filter Strip Techinical Guide. Document 393.

USDA Natural Resources Conservation Service, Wisconsin. 2005[a]. *Waste Storage Facility (Code 313). Field Office Technical Guide*.

USDA Natural Resources Conservation Service, Wisconsin. 2005[b]. Companion Document 635-5 Milking Center Wastewater Treatement. Agricultural Waste Management Field Handbook Notice WI-26, October 2005.

USDA Natural Resources Conservation Service, Wisconsin. 2005[c]. Wastewater Treatment Strip. (Code 635.) Field Office Technical Guide.

USDA Natural Resources Conservation Service, Wisconsin. 2005[d]. *Monthly Precipitation and Evaporation in Wisconsin.* Companion document 313-5. AWMFH Notice WI-25, January 2005.

Weber, R., 1991. Personal Communication. Southern Green County Stream Investigation. Wisconsin Department of Natural Resources, Madison, WI.

Weil, C. 1991. Milkhouse Wastewater Treatment: Experimental Treatment System. Ontario Ministry of Agriculture and Food, Alfred College of Technology, Ontario.

Weil, C. 1992. Personal Communication, Ontario Ministry of Agriculture and Food, Alford College of Technology, Ontario.

Wisconsin Department of Commerce (DCOMM). 2004. Private Onsite Wasterwater Treatment. Chapter Comm 83. Wisconsin Administrative Code.

Wright P.E. and R.E. Graves. 1998. *Guidlines for Milking Center Wastewater.* (DPC-15, NRAES-115). Northeast Regional Agricultural Engineering Service, Now Natural Resource, Agriculture, and Engineering Service, Ithica, NY.

Yang, S., J.H. Jones, F.J. Olsen and J.J. Paterson. 1980. *Soil as a Medium for Dairy Liquid Waste Disposal.* J. Environmental Quality. 9(3): 370-372.

Zall, R.R. 1972. Characteristics of Milking Center Waste Effluent from New York State Dairy Farms. *J. Milk and Food Tech*. 35 (1): 53-55.

Milking Center Wastewater Guidelines

A Companion Document to Wisconsin NRCS Standard 629
June 2009

Copies of this publication are available online at:
www.wi.nrcs.usda.gov/news/629guide.html

For a printed copy please contact the Wisconsin state NRCS office at (608)662-4422.

This publication was developed by the Wisconsin Standards Oversight Council (**www.socwisconsin.org**) and its cooperating agencies and organizations.